USER'S MANUAL

Manual Elevators

Manual Operated Elevators

ORIGINAL INSTRUCTIONS

REFERENCE Manual Elevators	REFERENCE DESCRIPTION Manual Elevatos
	VarcoBJ BV Nijverheidsweg 45 4879 AP Etten-Leur P.O. Box 17 4870 AA Etten-Leur The Netherlands Tel + 31-76-5083000 Fax + 31-76-5046000 www.nov.com
DOCUMENT NUMBER **50000815-MAN-001**	REV **D** June 2010

www.nov.com

NATIONAL OILWELL VARCO

NATIONAL OILWELL VARCO

User's Manual

Manual Elevators

REFERENCE SMX-elevator	REFERENCE DESCRIPTION Manual Elevators
	NOVBJ BV Nijverheidsweg 45 4879AP Etten-Leur Tel: +31-76-5083000 Fax: +31-76-5046000
DOCUMENT NUMBER **50000815-MAN-001**	REV **D**

NATIONAL OILWELL VARCO

www.nov.com

Revision History

D	20.04.2010	Update
C	03.11.2008	Update
B	05.09.2006	Update
A	21.12.2005	Update
-	20.04.2004	Issued for Implementation
Rev	**Date**	**Reason for issue**

This document is PDM-link controlled

Change Description

Revision	Change Description
-	First Issue
A	Updates due to comments on first release
B	Statement added about greasing inserts
C	SMX-added
C	Updates due to comments on B-release
C	SJL drawing added
D	SMX, HYC, SLX, SJH changed, DC dolly added

Table of Contents

Table of Contents

Table of Contents

Table of Contents

General information

Instructions

Original Instructions are published in English; in the event the end-user may wish to obtain a translation of these in the official language of the country in which the machinery is to be used please contact your local NOV representative. Please note that this service may not be free of charge. Original Instruction can be downloaded from www.NOV.com/drilling

Оригиналните инструкции са публикувани на английски език; в случай, че крайният потребител желае да получи превод на тези инструкции на официалния език на държавата, в която се използва оборудването, моля, свържете се с вашия местен представител на NOV. Моля, имайте предвид, че тази услуга може да не е безплатна. Оригиналните инструкции могат да бъдат изтеглени от: www.NOV.com/drilling

Původní návod je zveřejněn v angličtině; pokud si koncový uživatel přeje získat překlad návodu v úředním jazyce země, ve které se zařízení bude používat, může se obrátit na místního zástupce společnosti NOV. Upozorňujeme, že tato služba nemusí být zdarma. Původní návod je k dispozici ke stažení na adrese www.NOV.com/drilling

Juhendi originaal on avaldatud inglise keeles. Kui lõppkasutaja soovib tõlget selle riigi ametlikus keeles, kus seadmeid kasutatakse, palume pöörduda NOV-i kohaliku esindaja poole. Palume silmas pidada, et see teenus ei pruugi olla tasuta. Juhendi originaali saab alla laadida veebisaidilt www.NOV.com/drilling.

Instrukcijų originalas yra skelbiamas anglų kalba. Jei galutinis vartotojas norėtų gauti šių instrukcijų vertimą į šalies, kurioje įrengimai turi būti naudojami, oficialiąją kalbą, reikėtų kreiptis į vietinį NOV atstovą. Prašome atkreipti dėmesį, kad ši paslauga gali būti mokama. Instrukcijų originalą galima parsisiųsdinti iš tinklalapio www.NOV.com/drilling

Šo norādījumu oriģinālvaloda ir angļu valoda; gadījumā, ja jūs kā gala lietotājs vēlaties saņemt norādījumu tulkojumu tās valsts oficiālajā valodā, kurā šī mašīna tiks lietota, lūdzu, sazinieties ar vietējo „NOV" pārstāvi. Lūdzu, ņemiet vērā, ka šis var nebūt bezmaksas pakalpojums. Norādījumus oriģinālvalodā varat lejupielādēt no vietnes www.NOV.com/drilling

A használati utasítások eredetileg angol nyelven kerülnek kiadásra. Amennyiben a végfelhasználó meg szeretne kapni azon ország hivatalos nyelvén készült fordításukat, ahol a gépet használni fogják, akkor kérjük, vegye fel a kapcsolatot a NOV helyi képviselőjével. Kérjük, vegye figyelembe, hogy ezt a szolgáltatást esetleg nem tudjuk díjmentesen nyújtani. Az eredeti használati utasítás a www.NOV.com/drilling oldalról tölthető le.

Oryginalne instrukcje zostały wydane w języku angielskim. Aby uzyskać tłumaczenie tych instrukcji na język kraju, w którym urządzenie ma być używane, należy skontaktować się z lokalnym przedstawicielem firmy NOV. Należy pamiętać, że taka usługa jest płatna. Oryginalną instrukcję można pobrać na stronie www.NOV.com/drilling

As Instruções Originais são publicadas em inglês; se o utilizador final pretender obter uma tradução destas instruções no idioma oficial do país onde a maquinaria vai ser utilizada, deverá contactar o representante local da NOV. Chamamos a atenção para o facto de este serviço poder não ser gratuito. As Instruções Originais podem ser transferidas a partir do site www.NOV.com/drilling

Instrucțiunile originale sunt publicate în limba engleză; în eventualitatea în care utilizatorul final dorește să obțină o traducere a acestora în limba oficială a țării în care se vor folosi utilajele, vă rugăm să luați legătura cu reprezentantul NOV local. Vă rugăm să rețineți că este posibil ca acest serviciu să nu fie gratuit. Instrucțiunile originale pot fi descărcate de pe www.NOV.com/drilling

Pôvodný návod je vydaný v anglickom jazyku. Ak si koncový používateľ želá získať preklad v úradnom jazyku štátu, v ktorom sa stroj bude používať, obráťte sa na miestneho zástupcu spoločnosti NOV. Upozorňujeme, že táto služba nemusí byť bezplatná. Originálny návod je k dispozícii na prevzatie zo stránky www.NOV.com/drilling.

Originalna navodila so objavljena v angleščini; če končni uporabnik želi prevod teh navodil v uradnem jeziku države, kjer se bodo stroji uporabljali, se obrnite na lokalnega predstavnika podjetja NOV. Ta storitev mogoče ne bo brezplačna. Originalna navodila lahko prenesete s spletne strani www.NOV.com/drilling

De originale anvisninger er udgivet på engelsk. Måtte slutbrugeren ønske at få en oversættelse af disse i det officielle sprog af det land, hvor maskineriet skal bruges, henvises der til den lokale NOV-repræsentant. Bemærk venligst at denne service måske ikke er gratis. De originale anvisninger kan downloades fra www.NOV.com/drilling

Die Originalanleitung erscheint in englischer Sprache. Wünscht der Endverbraucher eine Übersetzung dieser Anleitung in der offiziellen Sprache des Landes, in dem die Maschine benutzt werden soll, dann wenden Sie sich bitte an Ihren örtlichen NOV-Vertreter. Bitte beachten Sie, dass diese Dienstleistung möglicherweise nicht kostenlos ist. Die Originalanleitung können Sie unter folgendem Link herunterladen: www.NOV.com/drilling.

Las instrucciones originales son publicadas en inglés. En el caso de que el usuario final quiera obtener una traducción en el idioma oficial del país donde la maquinaria será utilizada, debe ponerse en contacto con su representante local de NOV. Tenga en cuenta que este servicio puede conllevar gastos. Es posible descargar las instrucciones originales desde www.NOV.com/drilling.

Alkuperäiset ohjeet on julkaistu englannin kielellä; mikäli loppukäyttäjä haluaa saada niiden käännöksen sen maan virallisella kielellä, jossa konetta käytetään, on otettava yhteys paikalliseen NOV-edustajaan. On mahdollista, että tästä palvelusta peritään maksu. Alkuperäiset ohjeet voi ladata osoitteesta www.NOV.com/drilling

Les consignes originales sont publiées en anglais; dans le cas où l'utilisateur final demande une traduction de ces consignes vers la langue officielle du pays dans lequel la machine doit être utilisée, veuillez contacter le représentant NOV sur place. Le service de traduction peut être payant. Les consignes originales peuvent être téléchargées du site www.NOV.com/drilling.

Foilsítear Treoracha bunúsacha sa Bhéarla; i gcás ar mian leis an úsáideoir aistriúchán a fháil i dteanga oifigiúil na tíre ina bhfuil an t-innealra le húsáid déan teagmháil le d'ionadaí áitiúil NOV le do thoil. Bíodh a fhios agat gur féidir nach bhfuil an tseirbhís sin saor in aisce. Is féidir Treoir Bhunúsach a íoslódáil ag www.NOV.com/drilling

How to use this manual

This manual is divided into 9 sections. Each page within each section is marked with a black tab that lines up with the thumb nail index tabs for each section. You can quickly find each section without looking through a full table of contents. Use the symbols printed at the top corner of each page as a quick reference system. Each section uses a different symbol.

When applicable, each section includes:

1. A table of contents, or an illustrated view index showing:
   - Major assemblies, system or operations
   - Page references to descriptions in text
2. Disassembly / assembly information and tools
3. Inspection information
4. Testing / trouble shooting information
5. Repair information
6. Adjustment information
7. Torque values

Special information

Detailed descriptions of standard workshop procedures, safety principles and service operations are not included. Please note that this manual may contain warnings about procedures which could damage equipment, make it unsafe, or cause PERSONAL INJURY. Please understand that these warnings cannot cover all conceivable ways in which service (whether or not recommended by NOV) might be done, or the possible hazardous consequences of each conceivable ways. Anyone using service procedures or tools, whether or not recommended by NOV, must be thoroughly satisfied that neither personal safety nor equipment safety will be jeopardized.

All information contained in this manual is based upon the latest product information available at any time of printing. We reserve the right to make changes at any time without notice.

Intended audience

This manual is intended for use by field engineering, installation, operation, and repair personnel. Every effort has been made to ensure the accuracy of the information contained herein. Varco® 2010, Varco LP, will not be held liable for errors in this material, or for consequences arising from misuse of this material.

Conventions

Notes, Cautions, and Warnings

Notes, cautions, and warnings provide readers with additional information, and to advise the reader to take specific action to protect personnel from potential injury or lethal conditions. They may also inform the reader of actions necessary to prevent equipment damage. Please pay close attention to these advisories.

Note:

The note symbol indicates that additional information is provided about the current topics.

Caution:

The caution symbol indicates that potential damage to equipment or injury to personnel exists. Follow instructions explicitly. Extreme care should be taken when performing operations or procedures preceded by this caution symbol.

Warning:

The warning symbol indicates a definite risk of equipment damage or danger to personnel. Failure to observe and follow proper procedures could result in serious or fatal injury to personnel, significant property loss, or significant equipment damage.

Illustrations

Illustrations (figures) provide a graphical representation of equipment components or screen snapshots for use in identifying parts or establishing nomenclature, and may or may not be drawn to scale.

For component information specific to your rig configuration, see the technical drawings included with your NOV documentation.

Safety Requirements

NOV equipment is installed and operated in a controlled drilling rig environment involving hazardous situations. Proper maintenance is important for safe and reliable operation. Procedures outlined in NOV manuals are the recommended methods of performing operations and maintenance.

CAUTION: To avoid injury to personnel or equipment damage, carefully observe requirements outlined in this section.

General System Safety Practices

The equipment discussed in this manual may require or contain one or more utilities, such as electrical, hydraulic, pneumatic, or cooling water.

CAUTION: Read and follow the guidelines below before installing equipment or performing maintenance to avoid endangering exposed persons or damaging equipment.

- Isolate energy sources prior to beginning work.
- Avoid performing maintenance or repairs while the equipment is in operation.

- Wear proper protective equipment during equipment installation, maintenance, or repair.

Personnel Training

All personnel performing installation, operations, repair, or maintenance procedures on the equipment, or those in the vicinity of the equipment, should be trained on rig safety, tool operation, and maintenance to ensure their safety.

CAUTION: Personnel should wear protective gear during installation, maintenance, and certain operations.

Contact the NOV Drilling Equipment training department for more information about equipment operation and maintenance training.

Recommended Tools

Service operations may require the use of tools designed specifically for the purpose described. NOV recommends that only those tools specified be used when stated. Ensure that personnel and equipment safety are not jeopardized when following service procedures or using tools not specifically recommended by NOV.

Replacing Components

- Verify that all components (such as cables, hoses, etc.) are tagged and labeled during assembly and disassembly of equipment to ensure correct installation.
- Replace failed or damaged components with NOV certified parts. Failure to do so could result in equipment damage or injury to personnel.

Routine Maintenance

Equipment must be maintained on a routine basis. See this manual for maintenance recommendations.

CAUTION: Failure to conduct routine maintenance could result in equipment damage or injury to personnel.

Proper Use of Equipment

NOV equipment is designed for specific functions and applications, and should be used only for its intended purpose.

Elevator restrictions

The Elevator is designed to be used as an elevator for vertical lifting tubular goods, and must not be used for any other purpose.

WARNING: The slips of Y series elevators will set when the elevator is raised against the Collar Box upset, which pushes down the slip-setting ring

WARNING: Side loading the elevators is not permitted unless the elevator is free to rotate.

WARNING: Picking up pipe with a slip type elevator is permitted when the operator ensures the elevator is manually moved towards the tool joint, and engaged with all slip segments. In case of a flush type of pipe, no horizontal picking up is allowed unless using a certified lifting nubbin with sufficient load shoulder area.

WARNING: Do not pick up tubular with a standard elevator. For pick up tubular, use a SJH, SJX, SMX, SPL, SJL or an elevator equiped with a "verification pin".

Lifting

The lifting procedures should carefully be observed and carried out according to the manual.

Limited warranty

The warranty will be void if the Elevator or parts were either:

- unauthorized modified, repaired or serviced
- replacement parts not manufactured by NOV were utilized
- not properly stored or maintained

Identification numbers

You will find the serial number of the tool stamped into the body.

Warning plates

WARNING: Warning plates must be present on the Elevator. Do not remove the labels. When a label or warning plate has disappeared, it must be replaced.

SJH-elevator: Warning plate p/n # 201646: Be careful. Keep hand out of moving parts.

Information plate p/n 50000125:Where to get the information.

CE marking

All elevators comply with the Machinery Directive 2006/42/EC.

Design rating according to API 8C / ISO 13535

WARNING: To maintain API 8C / ISO 13535 compliance whenever re-manufacture or replacing any primary load bearing component, the complete unit must be load tested and MPI according NOV standards, by an authorized NOV repair facility only.

WARNING: The load rating is the maximum operating load, both static AND dynamic, to be applied to the equipment. The design load is the sum of the static and dynamic loads that would induce the maximum allowable stress in an item.

The design safety factor is established from below table as follows (for information only):

Load rating R in kN (ton)	Design safety factor SF_D
1334 kN (150 short tons) and less	3,00
1334 kN (150 short tons) to 4448 kN (500 short tons) inclusive	3,00 - (0,75 x (R - 1334) / 3114)[a] (3,00 - (0,75 x (R - 150) / 350))[b]
Over 4448 kN (500 short tons)	2,25

a In this formula, the value of R shall be in kilonewtons
b In this formula, the value of R shall be in short tons

WARNING: The design safety factor is intended as a design criterion and shall not under any circumstances be construed as allowing loads on the equipment in excess of the load rating.

Temperature rating

Description	Temperature
Minimum allowed ambient temperature	-4°F (- 20°C) *
Maximum allowed ambient temperature	113°F (+ 45°C) *

* In case the ambient temperature is outside this range, please contact NOV for guidance

General specifications

Elevator bore charts

Procedure

- In ordering all collar-type and 18° type BJ elevators for drill pipe, casing and tubing, first determine correct pipe size and corresponding elevator frame part number from specification tables on these pages.
- Then determine correct bore code from bore charts on this and the following pages.
- Add this number to the frame part number for the complete elevator.
- Note that the bore diagrams give bores for all BJ elevators other than BJ 18° elevators.

18° taper elevator

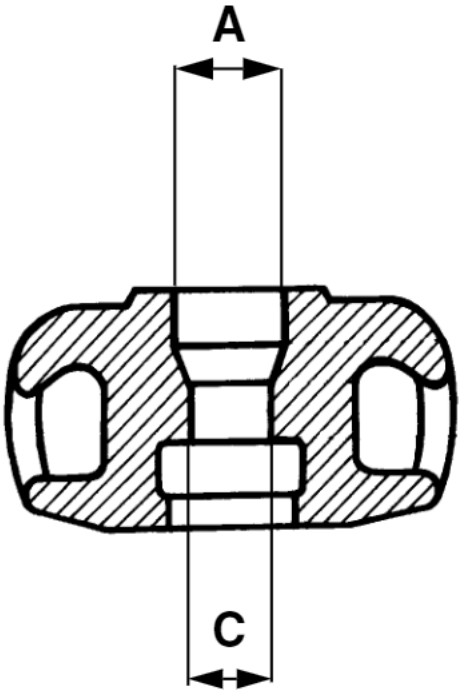

Drill pipe

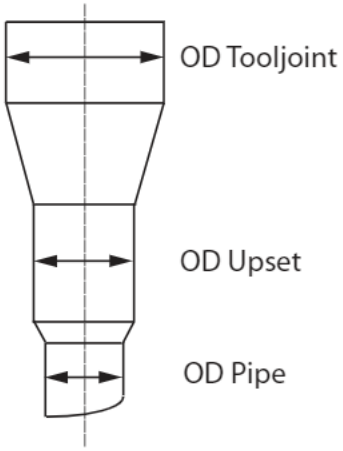

Drill pipe bore codes

Drill pipe			Elevator			Standard	Connection	
Drill pipe size	Type Upset	Upset	Dimension	Dimension	Bore code			
Max OD		Max. OD	Center bore C (new)	Top bore A (new)	18° taper		Hydrill Wedge Thread	Grant Prideco
2-3/8"	EU	2-9/16"	2-21/32"	4 1/4"	116	OH	WT 14S, 23, 26	XT 24, 26
						NC 26 (IF)		HT 26
						SL H90		GPDS 26
						WO		
2-7/8"	EU	3-3/16"	3-9/32"	4 3/4"	118	NC 31(IF)	WT 14S, 31	XT 31
						OH		HT 31
						SL H90		GPDS 31
						WO		
3-1/2"	IU	3-11/16"	3-25/32"	5 1/2"	119	XH	WT 14S, 31	XT 31
						NC 31(SH)		HT 31
3-1/2"	EU	3-7/8"	3-31/32"	5 1/2"	120	NC 38(IF)	WT 31, 38	XT 38
						OH		HT 38
						SL H90		GPDS 38
						WO		
4"	IU	4-3/16"	4-9/32"	6 1/2"	121	NC 40(FH)	WT 31, 38, 39	XT 38, 39
						SH		HT 38, 40
						H90		GPDS 40
4"	EU	4-1/2"	4-25/32"	6 3/4"	122	NC 46(IF)	WT 40	
						OH		
						WO		
4-1/2"	IU	4-11/16"	4-25/32"	6 3/4"	122	H90	WT 38	
4-1/2"	IEU	4-11/16"	4-25/32"	6 3/4"	122	NC 46(XH)	WT 39, 40	XT 40, 46
						FH		HT 46
						NC 38(SH)		GPDS 46
						H90		
4-1/2"	EU	5" to 5-1/8"	5-1/4"	7 1/8"	123	NC 50(IF)	WT 46	XT 50
						OH		HT 50
						WO		
5"	IEU	5-1/8"	5-1/4"	7 1/8"	123	NC 50(XH)	WT 39, 40, 46, 50	XT 46, 50
								HT 50
								GPDS 50
5"	IEU	5-1/8"	51/4"	7 1/2"	756	5 1/2" FH		
5-1/2"	IEU	5-11/16"	5-13/16"	7 7/8"	124	FH	WT 46, 50, 54, 56	XT 54, 57
								HT 55
								GPDS 55
5-7/8"	IEU	6"	6-1/8"	8 1/4"	770			XR
5 1/2"	IEU	6"	6-1/8"	8 1/4"	770		WT 54, 56	XT 57
6-5/8"	IEU	6-3/4"	7-1/32"	8 7/8"	740	FH	WT 56, 66	XT 65
								HT 65
								GPDS 65
5-1/2"	EIU		6.233	8"	678	IF	Mannesmann	
5-7/8"		6"	6.125	7.875	789			

Drill collars with zip lift recess bore chart

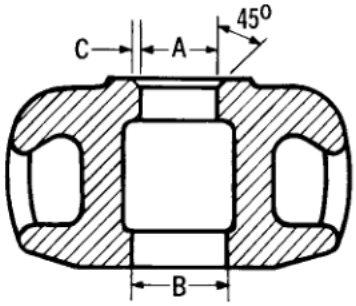

Drill collar OD	ZIP OD	Bore code	Top bore A	Bevel C	Bottom bore B
4 1/8"	3 11/16"	177	3 13/16"	1/16"	4 1/4"
4 3/4"	4 1/4"	435	4 3/8"	1/16"	4 7/8"
5 1/4"	4 3/4"	179	4 7/8"	1/16"	5 3/8"
5 1/2"	5"	180	5 1/8"	1/16"	5 5/8"
5 3/4"	5 1/8"	181	5 1/4"	1/16"	5 7/8"
6"	5 3/8"	362	5 1/2"	1/16"	6 1/8"
6 1/4"	5 5/8"	337	5 3/4"	1/16"	6 3/8"
6 1/2"	5 7/8"	373	6"	1/16"	6 5/8"
6 3/4"	6"	387	6 3/16"	3/32"	6 7/8"
7"	6 1/4"	361	6 7/16"	3/32"	7 1/8"
7 1/4"	6 1/2"	357	6 11/16"	3/32"	7 3/8"
7 1/2"	6 3/4"	188	6 15/16"	3/32"	7 5/8"
7 3/4"	7"	339	7 3/16"	3/32"	7 7/8"
8"	7 1/4"	336	7 7/16"	3/32"	8 1/8"
8 1/4"	7 1/2"	422	7 11/16"	3/32"	8 3/8"
8 1/2"	7 3/4"	426	7 15/16"	3/32"	8 5/8"
9"	8 1/8"	427	8 3/8"	1/8"	9 1/8"
9 1/2"	8 5/8"	370	8 7/8"	1/8"	9 5/8"
9 3/4"	8 7/8"	367	9 1/8"	1/8"	9 7/8"
10"	9 1/8"	195	9 3/8"	1/8"	10 1/8"
10 3/4"	9 7/8"	527	10 1/8"	3/32"	10 7/8"
11"	10 1/8"	419	10 3/8"	1/8"	11 1/8"
11 1/4"	10 3/8"	196	10 5/8"	1/8"	11 3/8"

Plain drill collars with lift plugs bore chart

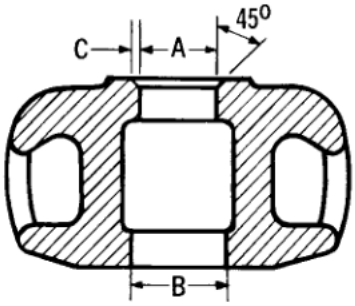

Drill collar OD	Bore code	Top bore A	Bevel C	Bottom bore B
2 1/2"	201	2 21/32"	1/16"	2 21/32"
2 3/4"	203	2 29/32"	1/16"	2 29/32"
3"	205	3 5/32"	1/16"	3 5/32"
3 1/8"	206	3 9/32"	1/16"	3 9/32"
3 1/4"	207	3 13/32"	1/16"	3 13/32"
3 1/2"	209	3 21/32"	1/16"	3 21/32"
3 3/4"	211	3 29/32"	1/16"	3 29/32"
4"	213	4 5/32"	1/16"	4 5/32"
4 1/8"	519	4 9/32"	1/16"	4 9/32"
4 1/4"	548	4 13/32"	1/16"	4 13/32"
4 1/2"	215	4 21/32"	1/16"	4 21/32"
4 3/4"	354	4 15/16"	1/16"	4 15/16"
5"	552	5 3/16"	1/16"	5 3/16"
5 1/4"	219	5 7/16"	1/16"	5 7/16"
5 1/2"	411	5 11/16"	1/16"	5 11/16"
5 3/4"	222	5 31/32"	1/16"	5 31/32"
6"	349	6 7/32"	1/16"	6 7/32"
6 1/4"	348	6 15/32"	1/16"	6 15/32"
6 3/8"	331	6 19/32"	1/16"	6 19/32
6 1/2"	135	6 23/32"	1/16"	6 23/32"
6 3/4"	338	7"	1/16"	7"
7"	372	7 1/4"	1/16"	7 1/4"
7 1/4"	335	7 1/2"	1/16"	7 1/2"
7 1/2"	137	7 3/4"	1/16"	7 3/4"
7	550	8"	1/16"	8"
8"	334	8 1/4"	1/16"	8 1/4"
8 1/4"	347	8 1/2"	1/16"	8 1/2"
8 1/2"	580	8 25/32"	1/16"	8 25/32"
8 3/4"	226	9 1/32"	1/16"	9 1/32"
9"	356	9 9/32"	1/16"	9 9/32"
9 1/4"	227	9 17/32"	1/16"	9 17/32"
9 1/2"	346	9 25/32"	1/16"	9 25/32"
10"	228	10 11/32"	1/16"	10 11/32"
10 1/2"	229	10 27/32"	1/16"	10 27/32"
11"	230	11 11/32"	1/16"	11 11/32"

Tubing bore chart

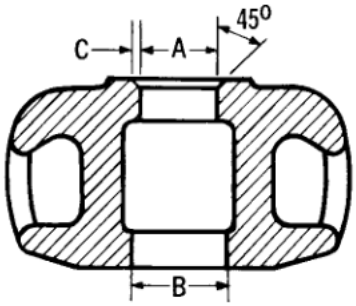

Tubing size	Style	Bore code	Top bore A	Bottom bore B
1.050”	Plain	150	1.125”	1.125”
	Upset Tubing	151	1.422”	1.422”
1.315”	Plain	152	1.390”	1.390”
	Upset Tubing	153	1.578”	1.578”
1.660”	Plain	154	1.734”	1.734”
	Upset Tubing	155	1.922”	1.922”
1.900”	Plain	156	1.984”	1.984”
	Upset Tubing	157	2.203”	2.203”
$2^3/8$”	Plain	158	2.453”	2.453”
	Upset Tubing	159	2.703”	2.703”
$2^7/8$”	Plain	160	2.953”	2.953”
	Upset Tubing	161	3.203”	3.203”
$3^1/2$”	Plain	162	3.578”	3.578”
	Upset Tubing	163	3.859”	3.859”
4”	Plain	164	4.078”	4.078”
	Upset Tubing	165	4.359”	4.359”
$4^1/2$”	Plain	129	4.594”	4.594”
	Upset Tubing	167	4.859”	4.859”

Casing bore chart

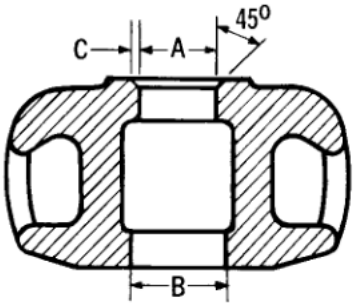

Casing size	Bore code	Top bore A	Bottom bore B
4 1/2”	129	4 19/32	4 27/32”
4 3/4”	130	4 27/32”	4 27/32”
5”	131	5 1/8”	5 3/32”
5 1/2”	132	5 5/8”	5 5/8”
5 3/4”	133	5 7/8”	5 7/8”
6”	134	6 1/8”	6 1/8”
6 5/8”	135	6 3/4”	6 3/4”
7”	136	7 1/8”	7 1/8”
7 5/8”	137	7 3/4”	7 3/4”
8 5/8”	139	8 25/32”	8 25/32”
9”	140	9 5/32”	9 5/32”
9 5/8”	141	9 25/32”	9 25/32”
9 7/8”	649	10 1/8”	10 1/8”
10”	831	10.156”	10.156”
10 1/8”	846	10.3”	10.3”
10 3/4”	142	10 15/16”	10 29/32”
11 3/4”	143	11 15/16”	11 15/16”
13 3/8”	144	13 9/16”	13 9/16”
13 5/8”	596	13 13/16”	13 13/16”
14”	690	14 13/64”	14 13/64”
16”	145	16 7/32”	16 7/32”
18”	723	18 1/4”	18 1/4”
18 5/8”	146	18 7/8”	18 7/8”
20”	147	20 9/32”	20 1/4””
21 1/2”	148	21 25/32”	21 25/32”
22”	688	22 9/32”	22 9/32”
24”	630	24 5/16”	24 5/16”
24 1/2”	149	24 13/16”	24 13/16
26”	650	26 11/32”	26 11/32”
28”	693	28 23/64”	28 23/64”
30”	644	30 3/8”	30 3/8”

Collar type

Bore Code	Top Bore	Bottom Bore
	A	B
101	3 3/8"	3 1/8"
102	3 13/16"	3 3/4"
103	4 1/16"	3 3/4"
104	4 5/16"	4 1/4"
105	4 13/16"	4 3/4"
106	5 5/16"	5 1/4"
107	5 7/8"	5 13/16"
108	3 1/8"	3 1/8"
109	2 5/8"	2 5/8"
110	2 3/4"	2 3/4"
111	3 1/2"	3 1/2"
112	3 1/16"	3 1/16"
113	5 11/16"	5 11/16"
114	6 1/4"	6 1/4"
115	2 13/16"	2 13/16"

Elevator specifications, requirements & sizes

NOV center latch elevators are constructed In two halves of practically the same weight for proper balance and easier opening and closing. Safety features include guarded operating handles to help prevent accidents to operators and an extra handle at the rear of the elevator for faster, safer operation. All elevators are equipped with a latch and latch lock combination. **In some cases, an addition "latched-and-locked verification pin" must be installed prior to lifting loads.**

NOV side door elevators consist of a stationary body and a door which can be opened to allow the pipe to be handled. All elevators have a latch lock mounted on the door. The construction protects the latch from accidental opening. Both latch and latch lock operate from a single handle. NOV elevators are made of high-quality steel castings that Is fully heat treated.

Slip type elevators Y series

NOV "Y" series elevators are conventional slip type elevators for handling tubing and small casing. There are 7 types ranging from 20 to 200 ton capacity and covering pipe sizes from 1.050" to 7-5/8" OD. They feature a four slip design which give an optimum contact on the pipe to prevent bottle necking and gauge damage.

HYC, MYC & YC series

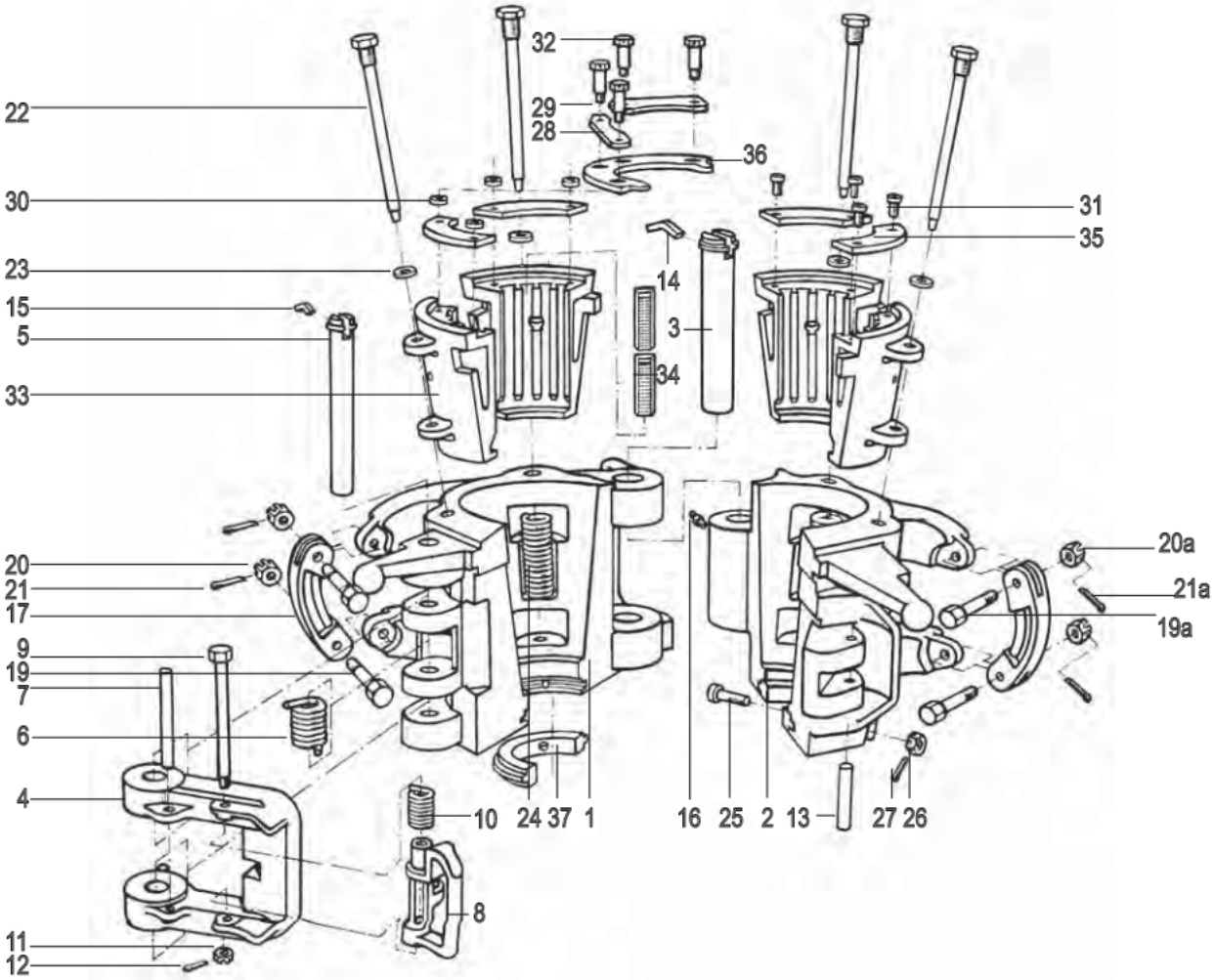

Dimensions & weights

Type	Frame	Cap.	Size	Size	Weight	Weight	Link size (min / max)			
		(tons)	(inch)	(mm)	(lbs)	(kg)	inch	mm	inch	mm
YC	24140Y	75	3 1/2-7	89-178	445	206	2 1/4"	57	2 3/4"	70
MYC	200360Y	125	3 1/2-7	89-178	750	336	2 1/4"	57	2 3/4"	70
HYC	BJ55310Y	200	2 7/8-7 5/8	73-194	997	452	2 1/4"	57	3 1/2"	89

Part list HYC, MYC & YC series

Item	Description	Qty	HYC	MYC	YC
1	Body	1	55301Y	200361Y	24074Y
2	Door	1	55302Y	200362Y	24073Y
3	Hinge pin	1	55311	200364	24181
4	Latch	1	55503Y	200363Y	15348Y
5	Latch pin	1	BJ55312	200365	24182
6	Latch spring	1	34909	200367	12978
7	Latch spring stop	1	13185	200368	
7a	Latch cam	1			12946
8	Latch lock	1	13152	13152	12972
8a	Latch lock pin	1			BJ13530
9	Latch lock bolt	1	15101	200371	
10	Latch lock spring	1	13188	13188	
11	Latch lock bolt nut	1	50512-C	50512-C	
12	Cotter pin	1	51402-12	51402-12	
13	Door lug pin	1	BJ13190	200366	12529
14	Hinge pin retainer	1	55504	36901-1	
15	Latch pin retainer	1	55505	36951-1	29448
16	Grease fitting	1	53201	53201	53201
17	Link block	2	9519	9519	9519
19	Link block bolt	2	8145	8145	8145
19a		2	939099-97	939099-97	939099-97
20	Link block nut	2	50512-C	50512-C	50512-C
20a		2	50514-C	50514-C	50514-C
21	Cotter pin	2	51402-12	51402-12	51402-12
21a		2	51402-16	51402-16	51402-16
22	Slip bolt	4	24076	24076	24076
23	Lock washer	4	51112-C	51112-C	51112-C
24	Slip spring	4	945044-2	24049	24049
25	Guide plate screw	4	55508**	200369	24075
26	Guide plate nut	4	50508-C	50508-C	50508-C
27	Cotter pin	4	51402-8	51402-8	51402-8
28 *2	Retainer 3 1/2" - 7"	2	30216	30216	30216
28 *2	Retainer 7 5/8"	2	BJ70147		
29 *2	Shoulder screw	4	55501	30211	30211
30 *2	Rubber bushing	4	55502	30213	30213
31 *2	Insert retainer screw	4	50108-8-C	50108-8-C	50108-8-C
32 *2	Lock wire	AR	947879	947879	947879

*2 Part of slip assembly

**In case size > 7.1/4", pn = 55508-1

Slip assemblies HYC, MYC & YC series

Item	Description	Qty	HYC	Qty	MYC & YC
	3.1/2" x 2.7/8 Slip size		**201355Y**		
33	Slip	4	201352Y		
34	Insert	24	201356		
35	Insert retainer	4	201354		
35a	Spacer				
36	Slip setting ring	1	201357		
37*3	Guide plate set	1	201358		
	4.1/2" x 3.1/2" Slip size		**55509Y**		**34931Y**
33	Slip	4	55303Y	4	24072Y4
34	Insert	24	24779	16	24779
35	Insert retainer	4	30214	4	30214
35a	Spacer			8	24506
36	Slip setting ring	1	55516	1	34932
37*3	Guide plate set	1	26827-1	1	26827-1
	41/2" x 4" Slip size		**55510Y**		**26830Y**
33	Slip	4	55303Y	4	24072Y4
34	Insert	24	24781	16	24781
35	Insert retainer	4	30214	4	30214
35a	Spacer			8	24506
36	Slip setting ring	1	55517	1	30209
37*3	Guide plate set	1	26827	1	26827
	4.1/2" Slip size		**55511Y**		**24072Y5**
33	Slip	4	55303Y	4	24072Y4
34	Insert	24	BJ16408	16	BJ16408
35	Insert retainer	4	30214	4	30214
35a	Spacer			8	24506
36	Slip setting ring	1	55518	1	30219
37*3	Guide plate set	1	24071-4	1	24071-4
	5.1/2" x 5" Slip size		**55512Y**		**24072Y7**
33	Slip	4	55304Y	4	24072Y
34	Insert	36	24783	16	24783
35	Insert retainer	4	30221	4	30221
35a	Spacer			8	24506
36	Slip setting ring	1	55519	1	30220
37*3	Guide plate set	1	24071	1	24071

*3 = Not part of slip assembly

Item	Description	Qty	HYC	Qty	MYC & YC
	51/2" Slip size		**55513Y**		**24072Y2**
33	Slip	4	55304Y	4	24072Y
34	Insert	36	BJ 16407	16	BJ16407
35	Insert retainer	4	30224	4	30224
35a	Spacer			8	24506
36	Slip setting ring	1	55520	1	30223
37*3	Guide plate set	1	24071-1	1	24071-1
	7” x 6”		**55515Y1**		
33	Slip	4	55305Y		
34	Insert	48	24785		
35	Insert retainer	4	30227		
35a	Spacer				
36	Slip setting ring	1	55520-1		
37*3	Guide plate set		24071-5		
	7" x 6.5/8 " Slip size		**55514Y**		**24077Y7**
33	Slip	4	55305Y	4	24077Y
34	Insert	48	24748	24	24748
35	Insert retainer	4	30227	4	30227
35a	Spacer			12	24506
36	Slip setting ring	1	55521	1	30226
37*3	Guide plate set	1	24071-3	1	24071-3
	7" Slip size		**55515Y**		**24077Y1**
33	Slip	4	55305Y	4	24077Y
34	Insert	48	BJ16407	24	BJ16407
35	Insert retainer	4	30230	4	30230
35a	Spacer			12	24506
36	Slip setting ring	1	55522	1	30229
37*3	Guide plate set	1	24071-2	2	24071-2
	7.5/8" Slip size		**70009Y**		
33	Slip	4	56305Y1		
34	Insert	48	70010		
35	Insert retainer	4	70011		
35a	Spacer				
36	Slip setting ring	1	70012		
37*3	Guide plate set	1	24071-6		

Dimensions & weights HYC, MYC & YC slip assemblies

Slip assembly	Weight		Slip assembly	Weight		Guide plate	Weight	
MYC/YC	Lbs	Kg	HYC	Lbs	Kg	HYC/MYC/YC	Lbs	Kg
			201355Y	282	128	201358	18	8
34931Y	130	59	55509Y	275	125	28827-1	15	7
26830Y	120	54	55510Y	270	123	28827	15	7
24072Y5	116	53	55511Y	268	122	24071	14	6
24072Y7	112	51	55512Y	251	114	24071-1	13	6
24077Y1	95	43				24071-3	10	5
24072Y2	101	46	55513Y	238	108	24071-2	8	4
24077Y7	97	44	55514Y	234	106	24071-8	7	3
			55515Y	229	104	24071-4	5	2
			70009Y	230	105			

YT&HYT series

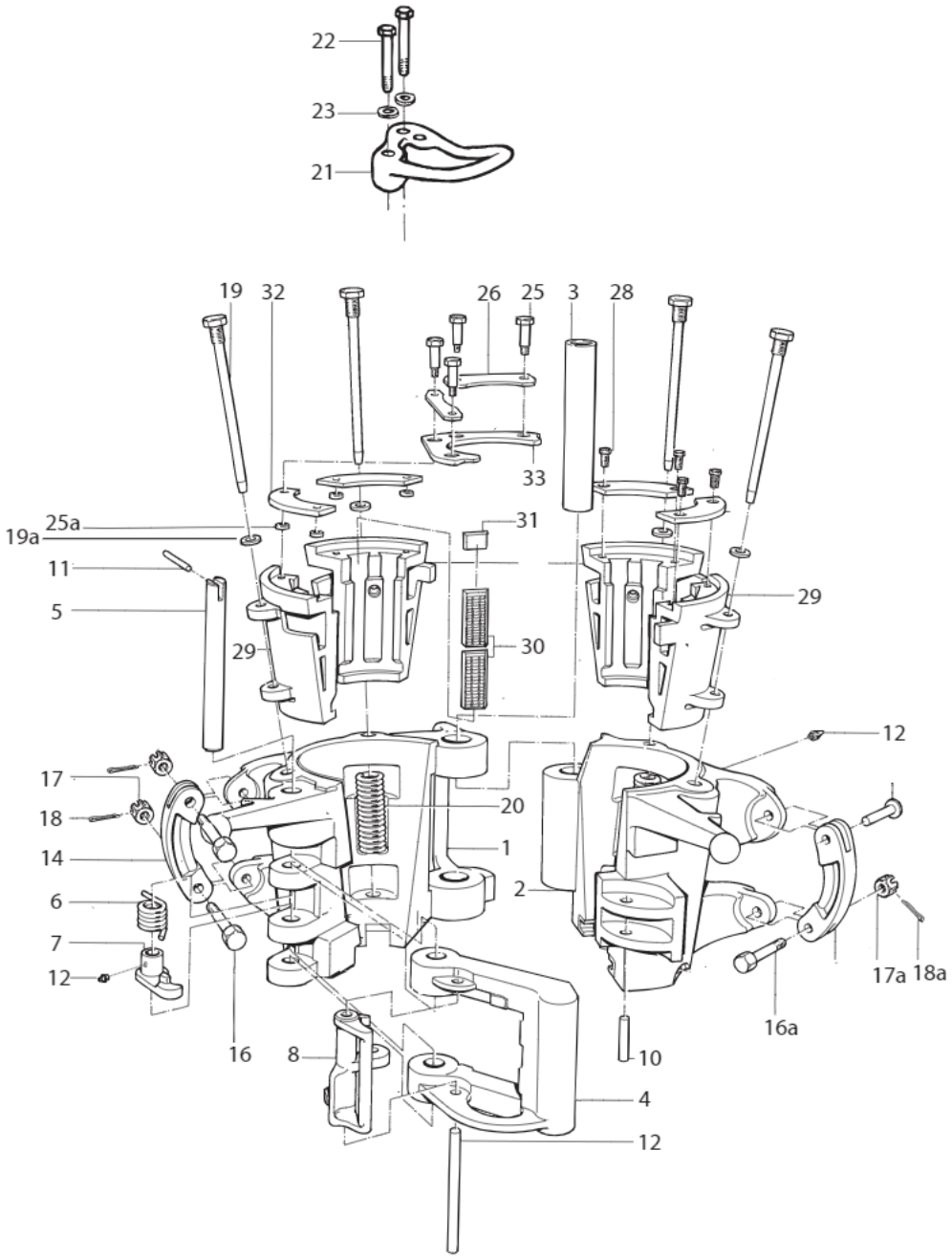

Dimensions and weights YT & HYT series

Type	Frame	Cap.	Size		Weight		Link Size Min/Max			
		tons	inches	mm	lbs	kg	inch	mm	inch	mm
YT	55600Y	75	1.315" - 3 1/2"	33-89	355	161	2 1/4"	57	2 3/4"	70
HYT	39284Y	150	2 3/8" - 3 1/2"	60-89	740	336	2 1/4"	57	3 1/2"	89

Parts list YT & HYT series

Item	Description	Qty	YT	HYT
1	Body	1	23106-1Y	39215Y
2	Door	1	23107-1Y	39205Y
3	Hinge pin	1	23116-1	39239
4	Latch	1	15348Y	39162Y
5	Latch pin	1	24182	39238
6	Latch spring	1	12978	39240
7	Latch cam	1	12946	
8	Latch lock	1	12972	39161
9	Latch lock pin	1	BJ13530	39251
9a	Latch lock spring	1		39241 not shown
10	Door lug pin	1	12529	
11	Latch pin retainer	1	29464	39254
11a	Hinge pin retainer	1		39253 not shown
12	Grease fitting	1	53201	53201
13	Grease fitting	1	53204	
14	Link block	2	9519	9519
16	Link block bolt	2	8145	8145
16a	Link block bolt	2	939099-97	939099-97
17	Link block nut	2	50512-C	50512-C
17a	Link block nut	2	50514-C	50514-C
18	Cotter pin	2	51402-12	51402-12
18a	Cotter pin	2	51402-16	51402-16
19	Slip bolt	4	23115	52321
19a	Lock washer	4		51112-C
20	Slip spring	4	23113	52539-1
21	Guide plate	1	23630	51090
22	Guide plate screw	2	50010-20-C8D	50010-18-C8D
23	Guide plate lockwasher	2	50910-C	50910-C
24*3	Lockwire	AR	947879	947879
25*3	Hex head capscrew	4 *2	27697	50012-24-C8D*2
25a	Lockwasher	4		50912-C
26*3	Set.ring ret. 31/2" slip	2	27546	
26*3	Set.ring ret. 27/8" slip	2	27507	
27*3	Set.ring bushing	4 *2	27696	51089
28*3	Hex head capscrew	4 *2	50007-6-C8D	50012-12-C8D

*1 3 Required for HYT

*2 2 Required for HYT

*3 Part of slip assembly

*4 Part of slip assembly in YT

Slip assemblies YT & HYT series

Item	Description	Qty	YT	Qty	HYT
	27/8" Slip size		**23108Y4**		**39259Y2**
29	Slip	4	23108Y2	4	39175Y
30	Insert	12	24773	16	24773
31	Insert spacer	4	24508		
32	Insert retainer	4	27451	4	39246
33	Setting ring	1	27695	1	39214-2
	2 7/8" x 23/8" Slip size		**23108Y6**		**39259Y4**
29	Slip	4	23108Y2	4	39175Y
30	Insert	12	29255	16	29255
31	Insert spacer	4	24508		
32	Insert retainer	4	27451	4	39246
33	Setting ring	1	27694	1	39214-1
	27/8"x 21/16" Slip size		**23108Y7**		
29	Slip	4	23108Y2		
30	Insert	12	29256		
31	Insert spacer	4	24508		
32	Insert retainer	4	27451		
33	Setting ring	1	27812		
	27/8" x 2" Slip size		**23108Y8**		
29	Slip	4	23108Y2		
30	Insert	12	29256		
31	Insert spacer	4	24508		
32	Insert retainer	4	27451		
33	Setting ring	1	27821		
	27/8" x 1.900" Slip size		**23108Y9**		
29	Slip	4	23108Y2		
30	Insert	12	29257		
31	Insert spacer	4	24508		
32	Insert retainer	4	27451		
33	Setting ring	1	27811		
	27/8" x 1.600" Slip size		**23108Y10**		
29	Slip	4	23108Y2		
30	Insert	12	29258		
31	Insert spacer	4	24508		
32	Insert retainer	4	27451		
33	Setting ring	1	27810		
	27/8" x 1.315" Slip size		**23108Y11**		
29	Slip	4	23108Y2		
30	Insert	12	29259		
31	Insert spacer	4	24508		
32	Insert retainer	4	27451		
33	Setting ring	1	29001		

Item	Description	Qty	YT	Qty	HYT
	31/2" Slip size		**23108Y5**		**39258Y2**
29	Slip	4	23108Y	4	39174Y
30	Insert	24	24774	32	24774
31	Insert spacer	8	24507		
32	Insert retainer	4	27530	4	39247
33	Setting ring	1	27813	1	39214-3
	31/2" x 27/8" Slip size		**23108Y3**		**39258Y4**
29	Slip	4	23108Y	4	39174Y
30	Insert	24	30358	32	30358
31	Insert spacer	8	24507		
32	Insert retainer	4	27530	4	39247
33	Setting ring	1	27695	1	39214-2

Slip assemblies YT & HYT series weights

Slip Assembly	Weight		Slip Assembly	Weight	
YT	**lbs**	**kg**	**HYT**	**lbs**	**kg**
23108Y5	64	29	39258Y2	141	64
23108Y3	76	34	39258Y4	170	72
23108Y4	76	34	39259Y2	158	72
23108Y6	79	36	39259Y4	170	72
23108Y7	81	37			
23108Y8	81	37			
23108Y9	84	38			
23108Y10	86	38			
23108Y11	86	39			

MYT series

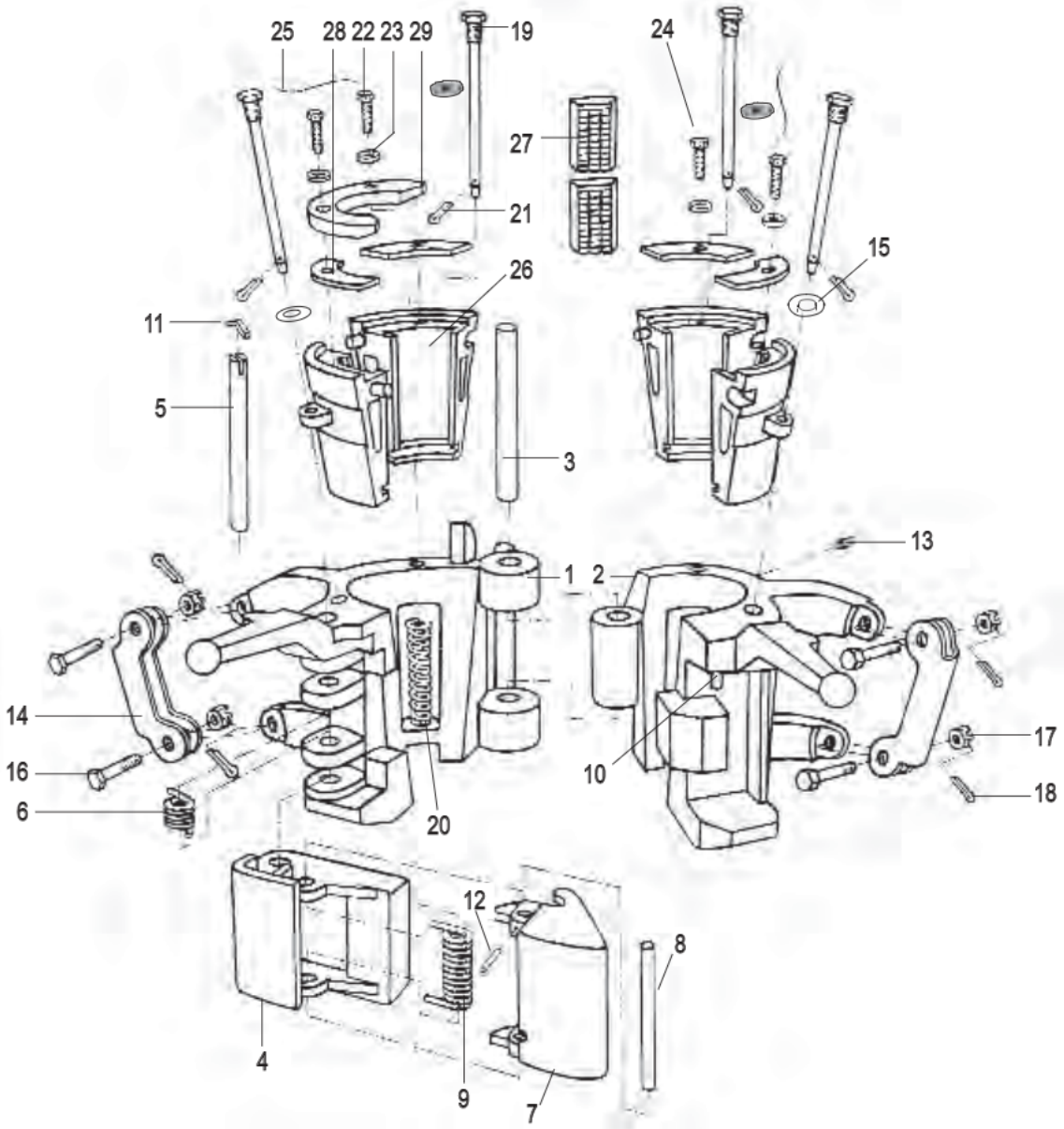

Dimensions and weights MYT series

Type	Frame	Cap. Size			Weight		Link Size Min/Max			
		tons	inches	mm	lbs	kg	inch.	mm	inch.	mm
MYT	29328Y	40	1.315" - 2 7/8"	33-73	148	67	1 1/4"	32	2 3/4"	70

Parts list LYT & MYT series

Item	Description	Qty	MYT
1	Body	1	29329Y
2	Door	1	29330Y
3	Hinge pin	1	29333
4	Latch	1	30652Y
5	Latch pin	1	29334
6	Latch spring	1	29338
7	Latch lock	1	30653
8	Latch lock pin	1	29335
9	Latch lock spring	1	29349
10	Latch lock door pin	1	30841
11	Latch pin retainer	1	947129-238
12	Latch lock pin retainer	1	947129-151
13	Grease fitting	1	53201
14	Link block	2	29337
15	Lockwasher	4	51110-C
16	Link block bolt	4	939099-65
17	Link block nut	4	50510-C
18	Cotter pin	4	51402-12
19	Slip pin /bolt	4	29336
20	Slip spring	4	29340
21	Cotter pin	4	
22*	Setting ring screw	2	29347
23*	Flatwasher	2	50810-N-C
24*	Hex head capscrew	2	50010-8-C8D
25	Lockwire	AR	947879

*Part of slip assembly

Slip assemblies weights MYT series

Slip Assembly	Weight	
MYT	**lbs**	**kg**
29343Y1	44	20
29343Y2	47	21
29343Y3	47	21
29343Y4	48	22
29343Y5	49	22
29343Y6	50	23
29343Y7	50	23

Slip assemblies MYT series

Item	Description	Qty	MYT
	2-7/8" Slip size		**29343Y1**
26	Slip	4	29343Y10
27	Insert	8	24773
28	Insert retainer	4	29344
29	Setting ring	1	29348
	2-7/8" x 2 3/8" Slip size		**29343Y2**
26	Slip	4	29343Y10
27	Insert	24	29255
28	Insert retainer	4	29344
29	Setting ring	1	29345
	2-1/16" Slip size		**29343Y3**
26	Slip	4	29343Y10
27	Insert	8	29256
28	Insert retainer	4	29344
29	Setting ring	1	29350
	2-1/16" x 2" Slip size		**29343Y4**
26	Slip	4	29343Y10
27	Insert	8	29256
28	Insert retainer	4	29344
29	Setting ring	1	29351
	2-1/16" x 1.900" Slip size		**29343Y5**
26	Slip	4	29343Y10
27	Insert	8	29257
28	Insert retainer	4	29344
29	Setting ring	1	29352
	2-1/16" x 1.660" Slip size		**29343Y6**
26	Slip	4	29343Y10
27	Insert	8	29258
28	Insert retainer	4	29344
29	Setting ring	1	29353
	2-1/16" x 1.315" Slip size		**29343Y7**
26	Slip	4	29343Y10
27	Insert	8	29259
28	Insert retainer	4	29344
29	Setting ring	1	29354
	2-1/16" x 1.050" Slip size		
26	Slip	4	
27	Insert	8	
28	Insert retainer	4	
29	Setting ring	1	

Collar type center latch elevators A series

NOV "A" series elevators are conventional center latch collar type elevators for handling drill collars, casing and tubing. There are 7 types, ranging from 35 to 150 Ton capacity, covering pipe sizes from 1.050" to 11 -1/4".

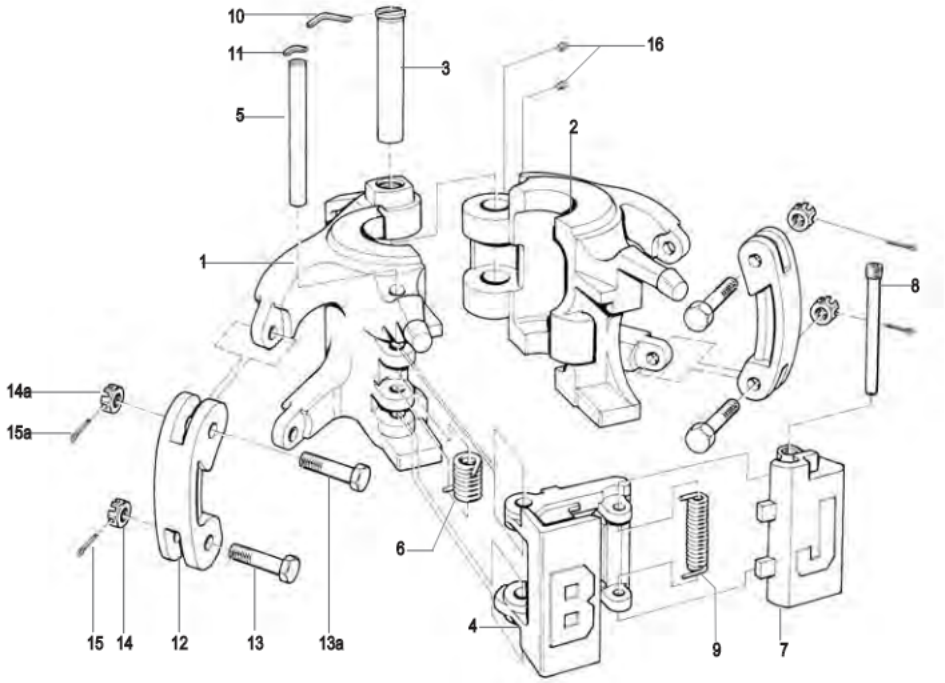

Dimensions and weights

Size		Type	Frame *	Cap.	Weight		Link Size			
inches	mm			tons	lbs	kg	inches Min	mm Min	inches Max	mm Max
1.050 " - 2 7/8"	28-73	TA	32387Y	35	57	26	1 1/4"	32	1 3/4"	44
1.660" - 2 7/8"	42-73	TA	32385Y	65	101	46	1 3/4"	44	2 3/4"	70
3 1/2" - 4 1/2"	89-114	TA	32386Y	65	136	62	1 3/4"	44	2 3/4"	70
2 3/8" - 5"	60-127	TMA	50006310Y	100	121	55	1 3/4"	44	2 3/4"	70
**2 7/8" - 4 3/4"	70 - 120	RGA	201360Y	200	304	138	1 3/4"	44	2 3/4"	70
**3 1/2" - 7"	89 - 178	GA	200034Y	350	546	248	2 1/4"	57	3 1/2"	89
**4" - 7 5/8"	102 - 193	GGA	201385Y	350	672	305	2 1/4"	57	3 1/2"	89
4 3/4" - 8 5/8"	121-219	TA	200000Y	100	260	118	1 3/4"	44	2 3/4"	70
4 1/2" - 8 5/8"	121-219	TA	32754Y	150	370	168	1 3/4"	44	3 1/2"	89
8 1/2" - 11 1/4"	216-286	TA	39342Y	150	524	238	1 3/4"	44	3 1/2"	89

* See bore code charts **For parts, see G-series parts lists

Parts list A series

Item	Description	Qty	TA 35 32387Y*	TA 65 32385Y*	TA 65 32386Y*	TMA 100 50006310Y*	TA 100 200000Y*	TA 150 32754Y*	TA 150 39342Y*
1	Body	1	32474Y	32445Y	32465Y	50006311Y	200001Y	32755Y	39346Y
2	Door	1	32473Y	32444Y	32464Y	50006312Y	200002Y	32756Y	39347Y
3	Hinge pin	1	32917	32916	32915	50006313	32919	32924	32924
4	Latch	1	32446Y	32380Y	32380Y	32380Y1	32752Y	32752Y	32752Y
5	Latch pin	1	32424-4	32424-3	50713	50006314	200004	32762	32762
6	Latch spring	1	32482	32470	32470	32470	32760	32760	32760
7	Latch lock	1	32447-1	32381-1	32381-1	32381-1	32757-2	32757-2	32757-2
8	Latch lock pin	1	36685	36208	36208	36208	36207	36207	36207
9	Latch lock spring	1	32483	32469	32469	32469	32758	32758	32758
10	Hinge pin retainer	1	32918	32892	32892	55505	32925	32925	32925
11	Latch pin retainer	1				200052	50200053		
12	Link block	2	23404	32430	32430	32430	32430	9519	9519
13	Link block bolt	2	23406	939099-65	939099-65	939099-65	939099-6 5	8145	8145
13a		2	23406	939099-65	939099-65	939099-65	939099-6 5	939099-97	939099-97
14	Link block nut	2	50508-C	50510-C	50510-C	50510-C	50510-C	50512-C	50512-C
14a		2	50508-C	50510-C	50510-C	50510-C	50510-C	50514-C	50514-C
15	Cotter pin	2	51402-12	51402-12	51402-12	51402-12	51402-12	51402-12	51402-12
15a		2	51402-12	51402-12	51402-12	51402-12	51402-12	51402-16	51402-16
16	Grease fitting	2	53201	53201	53201	53201	53201	53201	53201

* See bore code charts

18° center latch elevators G series

NOV "G" type elevators are conventional center latch taper type elevators for handling drill pipe. There are 5 types ranging from 100 to 500 ton capacity and covering pipe sizes from 2-3/8" to 6-5/8" OD. A modified G type elevator uses a special wear bushing for use with Top Drive Systems. The GA-series elevator can handle ZIP-groove, casing, upset tubing and square shoulder drill pipe.

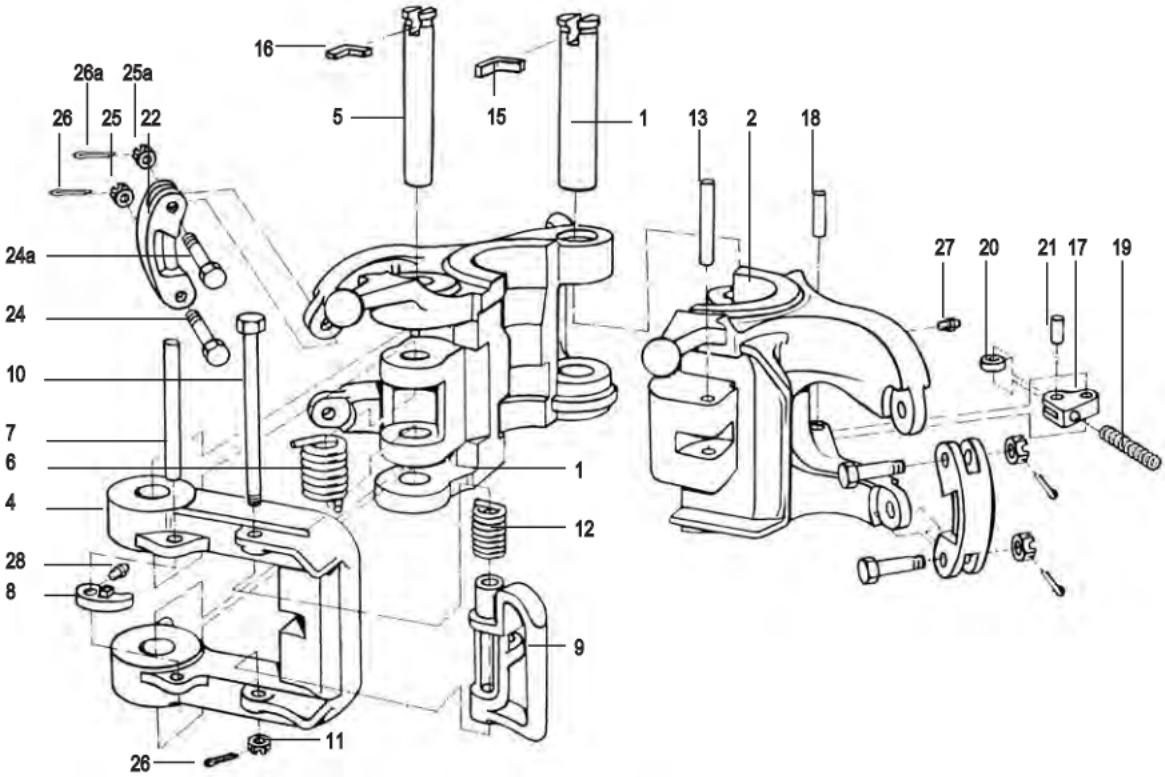

Dimensions G series

Size		Type	Frame	Cap.	Weight		Link Size			
							Min.		Max.	
inches	mm			tons	lbs	kg	inches	mm	inches	mm
2 3/8" - 5"	60-127	MG	30157Y	100	210-233	95-106	1 3/4"	44	2 3/4"	70
2 3/8" - 3 1/2"	60-89	RGG	200680Y	150	304	138	1 3/4"	44	2 3/4"	70
3 1/2" - 5 1/2"	89-140	MGG	35005Y	250	546-608	248-276	2 1/4"	57	3 1/2"	89
4" - 5 1/2"	102-140	GG	31068Y	350	672-693	305-314	2 1/4"	57	3 1/2"	89
4" - 6 5/8"	102-168	HGG	70013Y	500	1029	467	2 1/4"	57	3 1/2"	89

Dimensions G series with wear bushing

Size		Type	Frame	Cap.	Weight		Link Size			
							Min.		Max.	
inches	mm			tons	lbs	kg	inches	mm	inches	mm
3 1/2" - 5 1/2"	89-140	MGG	200058Y	250	585	266	2 1/4"	57	3 1/2	89
4" - 5 1/2"	102-140	GG	200056Y	350	680	310	2 1/4"	57	3 1/2	89
4" - 5 1/2"	102-140	HGG	200060Y	500	1010	459	2 1/4"	57	3 1/2	89
5 1/2" - 6 5/8"	140-168	HGG	200062Y	500	1010	459	2 1/4"	57	3 1/2	89

Parts list G-series

			MG	RGG	RGA	GA	GGA	MGG	GG	HGG
Item	**Description**	**Qty**	**30157Y***	**200680Y***	**201360Y***	**200034Y***	**201385Y***	**35005Y***	**31068Y***	**70013Y***
1	Body	1	11761Y1	200681Y	200681Y	34904Y	31069Y1	34904Y	31069Y1	30441Y
2	Door	1	11762Y1	23568Y2	23568Y2	34905Y	31070Y	34905Y	31070Y	30447Y
3	Hinge pin	1	26813	200683	200683	34908	33998	34908	33998	30553
4	Latch	1	BJ11763Y	13151Y	13151Y	34906Y	31071Y	34906Y	31071Y	30460Y
5	Latch pin	1	26814	200684	200684	34907	33999	34907	33999	30613
6	Latch spring	1	11766	13155	13155	34909	18416	34909	18416	202180
7	Latch spring stop	1		13185	13185	13185	13185	13185	13185	31215
8	Latch cam	1	11581							
9	Latch lock	1	11764	13152	13152	13152	13152	13152	13152	13152-1
10	Latch lock bolt	1	BJ11759	15101	15101	15101	15101	15101	15101	31138
11	Latch lock bolt nut	1		50512-C	50512-C	50512-C	50512-C	50512-C	50512-C	50512-C
12	Latch lock spring	1		13188	13188	13188	13188	13188	13188	13188
13	Door lug pin	1	12529	BJ13190	BJ13190	BJ13190	BJ13190	BJ13190	BJ13190	31216
15	Hinge pin retainer	1		32892	32892	34910	31074	34910	31074	30609
16	Latch pin retainer	1	8156	32918	32918	34911	32892	34911	32892	36901
17**	Door catch arm	1		12732	12732	12732	12732	12732	12732	12916-1
18**	Door catch arm pin	1		12916-1	12916-1	12916-1	12916-1	12916-1	12916-1	36901
19**	Door catch spring	1		9561	9561	9561	9561	9561	9561	9561
20**	Roller	1		12734	12734	12734	12734	12734	12734	12734
21**	Roller pin	1		12735	12735	12735	12735	12735	12735	12735
22	Link block	2	26817	9519	9519	9519	9519	9519	9519	30492
24	Link block bolt	2	8145	8145	8145	8145	8145	8145	8145	8145
24a		2	8145	939099-97	939099-97	939099-97	939099-97	939099-97	939099-97	939099-97
25	Link block nut	2	50512C	50512C	50512C	50512C	50512C	50512C	50512C	50512C
25a		2	50512C	50514C	50514C	50514C	50514C	50514C	50514C	50514C
26	Cotter pin	3	51402-12	51402-12	51402-12	51402-12	51402-12	51402-12	51402-12	51402-12
26a		2	51402-12	51402-16	51402-16	51402-16	51402-16	51402-16	51402-16	51402-16
27	Grease fitting	3	53201	53201	53201	53201	53201	53201	53201	53201
28	Grease fitting	1	53204							

Note:

Wear bushing part number: 200022-* or 200070-* (for HGG 200062Y)

* See bore code charts

Collar type side door elevators X series

NOV "SLX" type elevators are conventional side door collar type elevators for handling casing, tubing and drill collars. There are 2 types ranging from 65 to 100 ton capacity and covering pipe sizes from 1.660" to 2.7/8" OD

SLX-series.

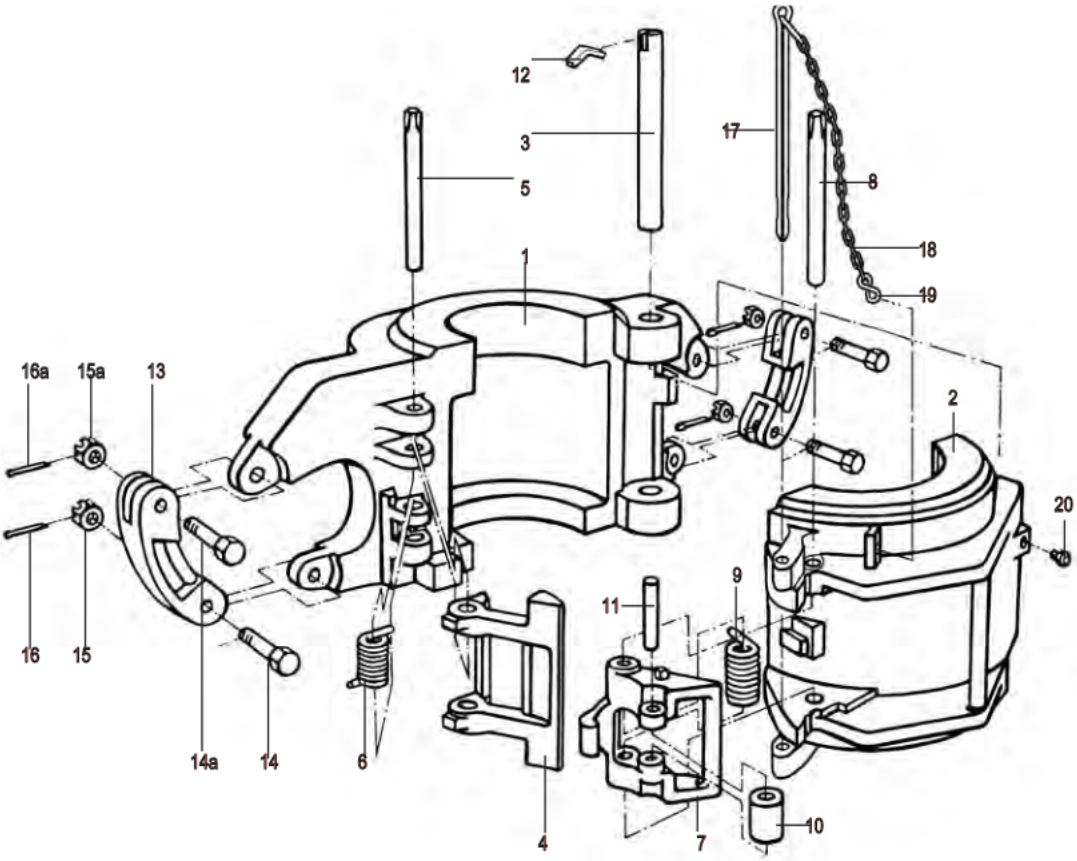

Dimensions and weights SLX series

Size		Type	Frame	Cap.	Weight		Link Size Min.		Link Size Max.	
inches.	mm			tons	lb	kg	in.	mm	in.	mm
1.660-2 7/8	42-73	SLX	33734Y	65	61	28	1 3/4	44.45	2 1/4	57.15
2 3/8-2 7/8	60-73	SLX	33693Y	100	77	35	1 3/4	44.45	2 3/4	69.85

Parts list SLX series

Item	Description	Qty	SLX 65 1.660"–2 7/8" 33734Y*	SLX 100 2 3/8"–2 7/8" 33693Y*
1	Body	1	33735Y	33694Y
2	Door	1	33736Y1	33695Y1
3	Hinge pin	1	32424-3	32424-5
4	Latch	1	33697Y	33697Y
5	Latch pin	1	33700-4	33700-4
6	Latch spring	1	33703	33703
7	Latch lock	1	33696	33696
8	Latch lock pin	1	33700-4	33700-4
9	Latch lock spring	1	33701	33701
10	Roller	1	33702	33702
11	Roller pin	1	33698	33698
12	Hinge pin retainer	1		
13	Link block	2	23404	32430
14	Link block bolt	2	23406	939099-65
14a		2	23406	939099-65
15	Link block nut	2	50508-C	50510-C
15a		2	50508-C	50510-C
16	Cotter pin	2	51402-12	51402-12
16a		2	51402-12	51402-12
17	Latch lock safety pin	1	50006097	50006097
18	Chain	1	59001008-3	59001008-3
19	S-hook	2	948051-2	948051-2
20	Grease fitting	1	53201	53201

* See bore code charts

SMX series

The Manual Side Door Elevator (SMX) is a new economic alternative for the SX-type elevators. A new door design brings enhanced usability, safety, and comfort for the operator. The elevator is suitable for handling collar type tubulars.

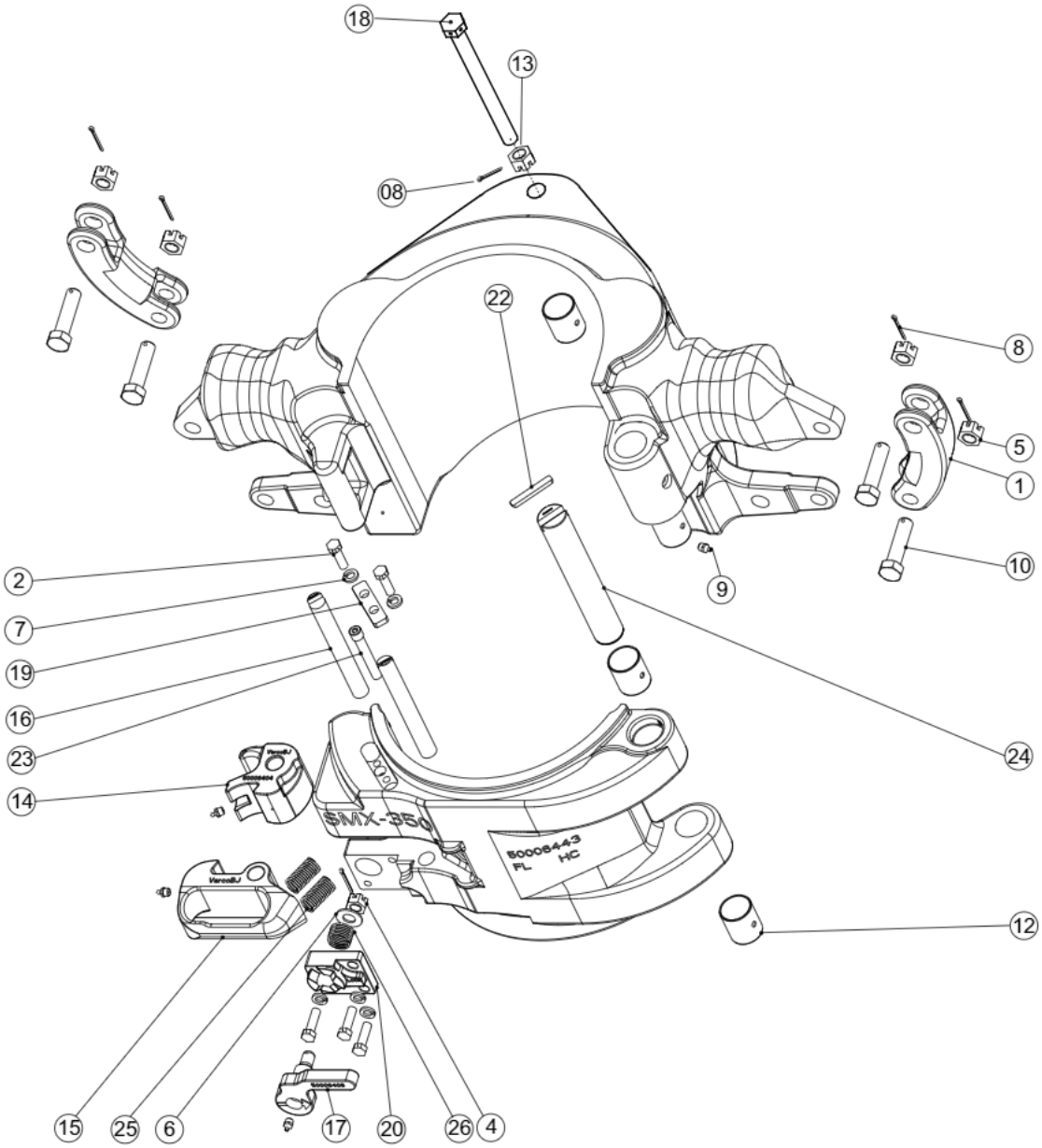

Dimensions & weights SMX series

Type	Frame part no.	Rating	Size	Appr. Weight	Appr. Weight	Appr. Dimensions		Link size Min / Max					
		tons (short/ metric)	inch	Lbs	Kg	inch (wxbXh)	mm (wxbxh)	Tons	inch	mm	Tons	inch	mm
SMX	50006430Y	150 / 136	3.1/2" - 5.3/4"	278	126	29.3x18.7x9.9	744x475x251	250	2.1/4	57	350	2.3/4	70
SMX	50006438Y	150 / 136	6" - 9"	291	132	28.1x20x9.9	713x508251	250	2.1/4	57	350	3.1/2	70
SMX	50006454Y	150 / 136	9 1/8" - 13.3/8"	406	187	34.9x23.1x10.9	886x587x277	250	2.1/4	57	350	3.1/2	70
SMX	50006426Y	250 / 227	6" - 9"	474	215	33.2x21.6x12.6	843x549x320	250	2.1/4	57	500	3.1/2	90
SMX	50006740Y	250 / 227	9.1/8" - 13.3/8"	563	255	37.4x23.1x12.6	950x587x320	250	2.1/4	57	500	3.1/2	90
SMX	50006440Y	350 / 317	9.1/8" - 13.3/8"	563	255	37.4x23.1x12.6	950x587x320	250	2.1/4	57	500	3.1/2	90
SMX	50006450Y	250 / 227	13.1/2" - 17.7/8"	679	308	42.2x24.3x13.5	1071x617x343	250	2.1/4	57	500	3.1/2	90
SMX	50006460Y	250 / 227	18" - 24.1/2"	902	409	48.8x30.6x14.6	1240x777x371	250	2.1/4	57	500	3.1/2	90

Parts list for SMX series

Item	Description	Qty	Part Number	Qty	Part Number	Qty	Part Number	Qty	Part Number	Qty	Part Number
			50006438Y		50006430Y		50006440Y		50006454Y		50006460Y
1	Link block	2	9519	2	50006744	2	9519	2	9519	2	9519
2	Screw, cap-hex hd (unc-2a)	5	50007-12-C8D	5	50007-12-C8D	5	50007-12-C8D	5	50007-12-C8D	5	50007-12-C8D
4	Nut, hex-slotted (unc-2b)	5	50510-C	5	50510-C	1	50510-C	5	50510-C	1	50510-C
5	Nut, hex-slotted (unc-2b)	na	na	na	na	4	50512-C	na	50512-C	4	50512-C
6	Washer, flat	1	50810-N-C	1	50810-N-C	1	50810-N-C	1	50810-N-C	1	50810-N-C
7	Washer, lock-heavy	5	51007-C	5	51007-C	5	51007-C	5	51007-C	5	51007-C
8	Pin, cotter	6	51402-12	6	51402-12	6	51402-12	6	51402-12	7	51402-12
9	Fitting,grease,straight	4	53201	4	53201	4	53201	4	53201	4	53201
10	Hexagon head cap screw, class 2a	4	939099-96	4	939099-65	4	939099-96	4	939099-96	4	939099-96
12	Bushing	4	979770-2820	4	979770-2820	4	979770-56	4	979770-56	4	979770-56
13	Nut, hex slotted (UNC-2B)	1	50512-C	1	50512-C	1	50512-C	1	50512-C	2	50512-C
14	Cam latch SMX, machining	1	50006404Y1	1	50006404Y1	1	50006404Y1	1	50006404Y1	1	50006404Y1
15	Cam latch lock SMX, machining	1	50006405Y1	1	50006405Y1	1	50006405Y1	1	50006405Y1	1	50006405Y1
16	SMX camlatch and lock pin	2	50006407	2	50006437	2	50006407	2	50006437	2	50006437
17	SMX verification lock machined	1	50006408	1	50006408	1	50006408	1	50006408	1	50006408
18	Hexagon head cap screw, class 2A	1	939099-536	1	939099-546	1	939099-586	1	939099-566	2	939099-516
19	Lock strip	1	50006424	1	50006424	1	50006424	1	50006424	1	50006424
20	Lock stop block	1	50006425	1	50006425	1	50006425	1	50006425	1	50006425
22	Lock bar,hinge pin SMX-el	1	50006421	1	50006421	1	50006444	1	50006444	1	50006444
23	Camlatch stop pin	1	50006423	1	50006423	1	50006445	1	50006445	1	50006465
24	Hinge pin SMX	1	50006406	1	50006436	1	50006446	1	50006459	1	50006446
25	Compression spring d-275-a	2	59000333	2	59000333	2	59000333	2	59000333	2	59000333
26	Compression spring d-268-b	1	59000334	1	59000334	1	59000334	1	59000334	1	59000334
28**	Bushing	3	979770-2825	3	979770-2825	na	na	na	na	na	na

**Not shown in view

Item	Description	Qty	Part Number	Qty	Part Number	Qty	Part Number
			50006426Y		50006450Y		50006740Y
1	Link block	2	9519	2	9519	2	9519
2	Screw, cap-hex hd (unc-2a)	5	50007-12-C8D	5	50007-12-C8D	5	50007-12-C8D
4	Nut, hex-slotted (unc-2b)	1	50510-C	1	50510-C	1	50510-C
5	Nut, hex-slotted (unc-2b)	4	50512-C	4	50512-C	4	50512-C
6	Washer, flat	1	50810-N-C	1	50810-N-C	1	50810-N-C
7	Washer, lock-heavy	5	51007-C	5	51007-C	5	51007-C
8	Pin, cotter	6	51402-12	7	51402-12	6	51402-12
9	Fitting,grease,straight	4	53201	4	53201	4	53201
10	Hexagon head cap screw, class 2a	4	939099-96	4	939099-96	4	939099-96
12	Bushing	4	979770-56	4	979770-56	4	979770-56
13	Nut, hex slotted (UNC-2B)	1	50512-C	2	50512-C	1	50512-C
14	Cam latch SMX, machining	1	50006404Y	1	50006404Y	1	50006404Y
15	Cam latch lock SMX, machining	1	50006405Y	1	50006405Y	1	50006405Y
16	SMX camlatch and lock pin	2	50006407	2	50006437	2	50006407
17	SMX verification lock machined	1	50006408	1	50006408	1	50006408
18	Hexagon head cap screw, class 2A	1	939099-586	2	939099-526	1	939099-586
19	Lock strip	1	50006424	1	50006424	1	50006424
20	Lock stop block	1	50006425	1	50006425	1	50006425
22	Lock bar,hinge pin SMX-el	1	50006444	1	50006444	1	50006444
23	Camlatch stop pin	1	50006445	1	50006445	1	50006445
24	Hinge pin SMX	1	50006446	1	50006446	1	50006446
25	Compression spring d-275-a	2	59000333	2	59000333	2	59000333
26	Compression spring d-268-b	1	59000334	1	59000334	1	59000334
28**	Bushing	na	na	na	na	na	na

**Not shown in view

Link handle kit

The Link handle kit can be used in combination with a SMX or other kind of Manual Elevator side-door type. It is developed for easier and safer closing the elevator. Part number 50006435. will fit on 350 and 250 ton links.

Parts link handle kit

Part number	Qty	Description
50006409	1	SMX link handle front
50006410	1	SMX link handle, back
51106-C	2	Washer, lock-hi-collar
50006434	1	Safety cable
980257-16	2	Screw, cap hex
980257-12	2	Screw, cap hex
51433-8	2	Pin, cotter

SX-series

NOV "SX" type elevators are conventional size door latch collar type elevators for handling a single joint of casing or tubing. The SX type elevator has a 250 up to 500 ton capacity covering pipe sizes from 9.5/8" - 13.3/8" OD.

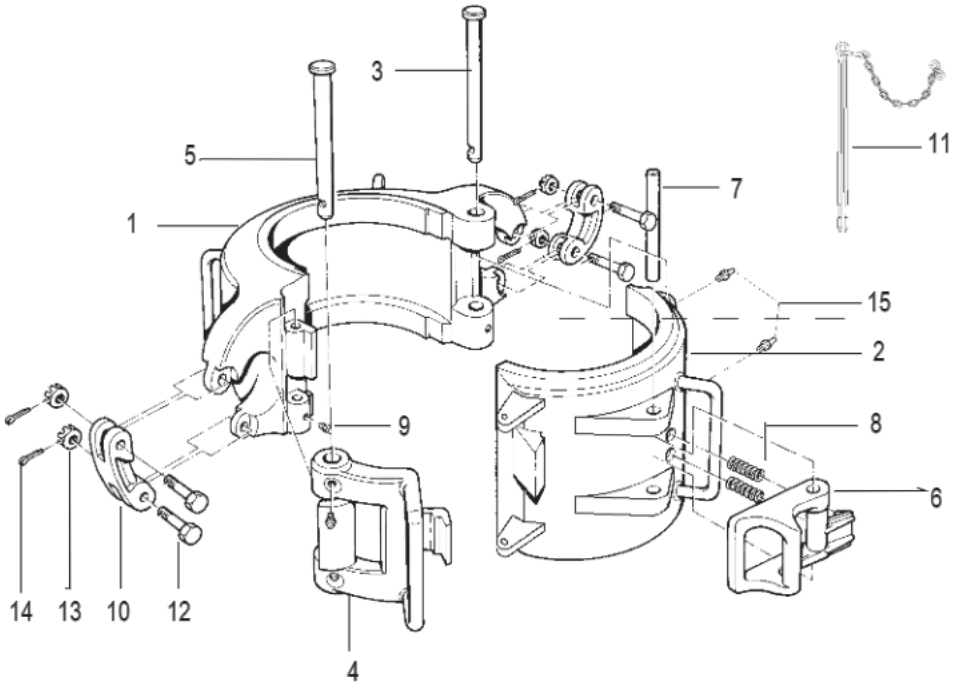

Dimensions and weights SX series

Size		Type	Frame	Cap.	Weight		Link Size Min.		Link Size Max.	
inches.	mm			tons	lb	kg	in.	mm	in.	mm
18⅝-20	473-508	SX	30598Y	250	1395-1432	633-650	2¾	69.85	3½	88.9
9⅝-13⅝	245-340	SX	29964Y	500	1200-1235	544-560	2¾	69.85	3½	88.9
16	406	SX	30729Y	500	1200	544	2¾	69.85	3½	88.9

Parts list SX series

Item	Description	Qty	SX250 18 5/8"-20" 30598Y*	SX500 9 5/8"-13 3/8" 29964Y*	SX500 16" 30729Y*
1	Body	1	30596Y	29943Y	30730Y
2	Door	1	30595Y	29955Y	30731Y
3	Hinge pin	1	29956	29956	29956
4	Latch	1	30597Y	29945Y	30597Y2
5	Latch pin	1	29951	29951	30696
6	Latch lock	1	6021	6021	6021
7	Latch lock pin	1	6027	6027	6027
8	Latch lock spring	2	30657	30657	30657
9	Set screw	2	50712-8-B-C	50712-8-B-C	50712-8-B-C
10	Link block	2	9519	9519	9519
11	Latch lock safety pin assembly	1	203429-1	203430-1	203430-1
11a	Lock pin	1	203431	203431	203431
11b	S-hook	1	948051-2	948051-2	948051-2
11c	Ring welded	1	979856-2	979856-2	979856-2
11d	Chain	0.51			
11d	Chain	0.59	59001008-3	59001008-3	59001008-3
12	Link block bolt	2	8145	8145	8145
12a		2	939099-97	939099-97	939099-97
13	Link block nut	2	50512-C	50512-C	50512-C
13a		2	50514-C	50514-C	50514-C
14	Cotter pin	2	51402-12	51402-12	51402-12
14a		2	51402-16	51402-16	51402-16
15	Grease fitting	4	53201	53201	53201

* See bore code charts

SLX-DD-Series

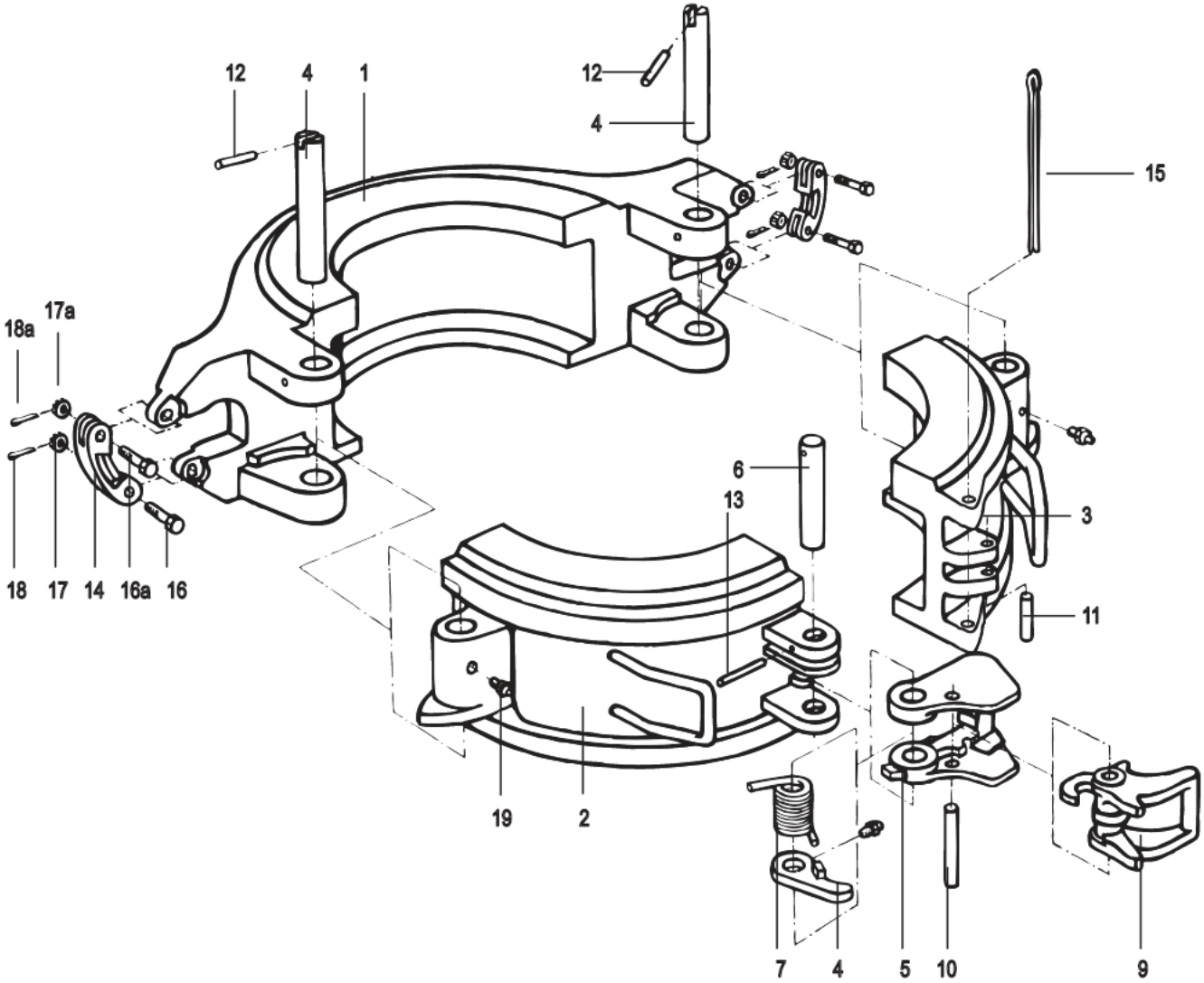

Dimensions and weights SLX-DD series

							Link Size			
Size		Type	Frame	Cap.	Weight		Min.		Max.	
inches.	mm			tons	lb	kg	in.	mm	in.	mm
26-30	663 - 762	SLX DD	52755Y	150	1600-1820	726-826	1¾	44.45	3½	88.9

Parts list SLX-DD series

Item	Description	Qty	SX 150 DD 26" - 30" 52755Y*
1	Body	1	52756Y
2	Door left hand	1	52757Y1
3	Door right hand	1	52757Y2
4	Hinge pin	2	52763
5	Latch	1	BJ 11763Y
6	Latch pin	1	52760
7	Latch spring	1	11766
8	Latch cam	1	11581
9	Latch lock	1	11764
10	Link lock pin	1	BJ 11759
11	Door lug pin	1	12529
12	Hinge pin retainer	2	943632-405
13	Latch pin retainer	1	52810
14	Link block	2	9519
15	Latch lock retainer pin ass'y	1	203436-1
16	Link block bolt	2	8145
16a	Link block bolt	2	939099-97
17	Link block nut	4	50512-C
17a	Link block nut	2	50514-C
18	Cotter pin	4	51402-12
18a	Cotter pin	2	51420-16
19	Grease fitting	3	53201

* See bore code charts

Single joint elevators

SPL series

NOV "SPL" type elevators using tapered Inserts are conventional center latch type elevators for handling a single joint of 18° drill pipe and 12° or 5° casing and tubing. There are 8 types with 5 ton capacity covering 18° drill pipe sizes from 3-1/2' to 6-5/8" OD, 12° tubing sizes from 2-3/8" to 4-1/2" OD and 5° casing or tubing sizes 2-7/8 to 10 3/4" OD.

SPL

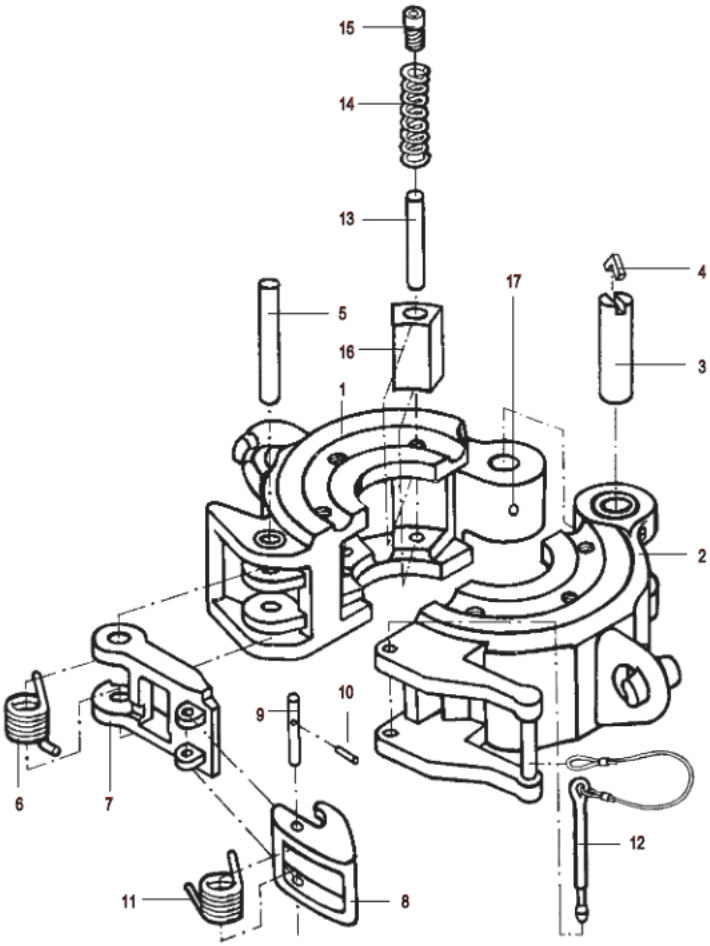

Dimensions & weights SPL

Type	Frame part no.	Rating tons (short/metric)	Size	Weight Lbs	Weight Kg
SPL 5°	200008	5 / 4.5	2 7/8" - 5 1/2"	77	35
SPL 5°	200010	5 / 4.5	5 1/2" - 7 5/8"	108	49
SPL 5°	200012	5 / 4.5	8 5/8'. - 9 5/8"	145	66
SPL 5°	200013	5 / 4.5	10 3/4"	160	73
Type	**Ass'y no.**	**Rating tons (short/metric)**	**Size**	**Weight Lbs**	**Weight Kg**
SPL 12°	200014	5 / 4.5	2 3/8" - 4 1/2"	86	39
SPL 18°	200009	5 / 4.5	2 3/8" - 5"	79	36
SPL 18°	200011	5 / 4.5	5 1/2" - 6 5/8"	94	42

Parts list SPL

Item	Description	Qty	5° SPL 200008Y*	5° SPL 200010Y*	5° SPL 200012Y*	5° SPL 200013Y*	12° SPL 200014Y*	18° SPL 200009Y*	18° SPL 200011Y*
1	Body	1	36182	36386	36263	36263	36182	36182	36386
2	Door	1	200031	200032	200033	200033	200031	200031	200032
3	Hinge pin	1	200050	200050	200050	200050	200050	200050	200050
4	Hinge pin retainer	1	200052	200052	200052	200052	200052	200052	200052
5	Latch pin	1	BJ33035	BJ33035	BJ33035	BJ33035	BJ33035	BJ33035	BJ33035
6	Latch spring	1	7829-1	7829-1	7829-1	7829-1	7829-1	7829-1	7829-1
-	Safety latch assembly	1	70497	70497	70497	70497	70497	70497	70497
7	Safety latch	1	200026Y	200026Y	200026Y	200026Y	200026Y	200026Y	200026Y
8	Latch lock	1	200027Y	200027Y	200027Y	200027Y	200027Y	200027Y	200027Y
9	Latch lock pin	1	70494	70494	70494	70494	70494	70494	70494
10	Latch lock pin retainer	1	51602-6-C	51602-6-C	51602-6-C	51602-6-C	51602-6-C	51602-6-C	51602-6-C
11	Latch lock spring	1	70495	70495	70495	70495	70495	70495	70495
12	Latch retaining pin assy	1	34439	34439	34439	34439	34439	34439	34439
13	Slip pin	6	203428-28	203428-28	51206-28	51206-28	203428-28	203428-28	203428-28
14	Slip spring	6	945035-708	945035-708	945035-708	945035-708	945035-708	945035-708	945035-708
15	Pipe plug	6	53000-4	53000-4	53000-4	53000-4	53000-4	53000-4	53000-4
16	Slip	6	36184-*	36248-*	36186-*	36187-*	36184-*	36184-*	36248-*
17	Grease fitting	1	53201	53201	53201	53201	53201	53201	53201

*See bore code charts

Tapered inserts for SPL-series elevators

Elevator Ass'y No. = Frame No.	Type	Tapered Insert	Qty	Size
200008*	SPL 5°	36184-278	6	2 7/8"
	SPL 5°	36184-312	6	3 1/2"
	SPL 5°	36184-400	6	4"
	SPL 5°	36184-412	6	4 1/2"
	SPL 5°	36184-500	6	5"
	SPL 5°	36184-512	6	5 1/2"
200010*	SPL 5°	36284-512	6	5 1/2"
	SPL 5°	36248-658	6	6 5/8"
	SPL 5°	36248-700	6	7"
	SPL 5°	36248-758	6	7 5/8"
200012*	SPL 5°	36186-858	6	8 5/8"
	SPL 5°	36186-958	6	9 5/8"
	SPL 5°	36186-978	6	9 7/8"
200013*	SPL 5°	36187-107	6	10 3/4"

Elevator Ass'y No.	Frame No. Used	Type	Tapered Insert	Qty	Size
200014*	200008	SPL 12°	53614-238	6	2 3/8"
		SPL 12°	53614-278	6	2 7/8 "
		SPL 12°	53614-312	6	3 1/2 "
		SPL 12°	53614-400	6	4"
		SPL 12°	53614-412	6	4 1/2 "
200009*	200008	SPL 18°	36185-238	6	2 3/8 "
		SPL 18°	36185-278	6	2 7/8 "
		SPL 18°	36185-312	6	3 1/2 "
		SPL 18°	36185-400	6	4 "
		SPL 18°	36185-412	6	4 1/2 "
		SPL 18°	36185-500	6	5 "
200011*	200010	SPL 18°	70253-512	6	5 1/2 "
		SPL 18°	70253-658	6	6 5/8 "

NOTE: The frame number + tapered insert number determines the actual size of the elevator.
E.g. 200008 + 53614-312 = SPL 12° for 3.1/2" pipe becomes 200014Y312.
E.g. 200008 + 36184-312 = SPL 5° for 3.1/2" pipe becomes 200008Y312.

SJL series

The SJL are conventional collar type center latch elevators with 5 tons rating and are designed to handle collar type tubular from size 2 3/8" to 24 ½"..

SJL

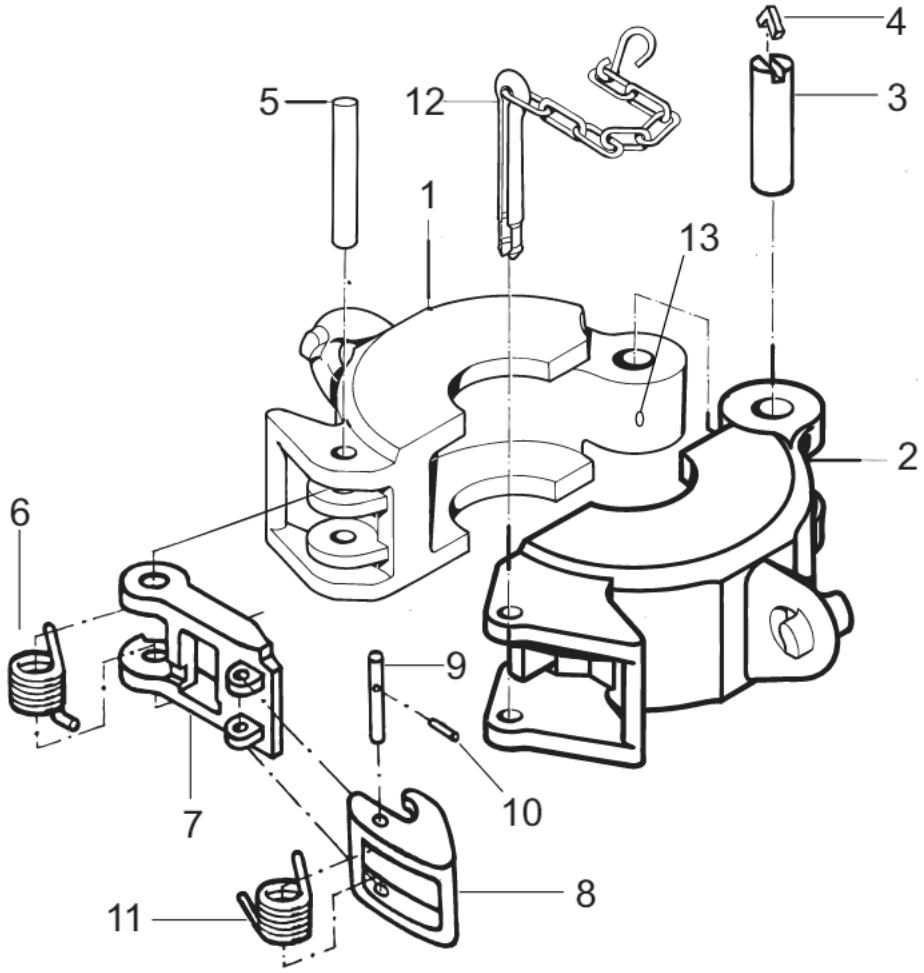

Dimensions & weights SJL

Type	Frame part no.	Rating tons (short/metric)	Size	Weight Lbs	Weight Kg
SJL	70499	5 / 4.5	2 3/8" - 3 1/2"	45	20
SJL	70500	5 / 4.5	4" - 5 1/2"	51	23
SJL	70501	5 / 4.5	6" - 7 5/8"	72	32
SJL	72522	5 / 4.5	8 5/8" - 10 3/4"	98	44
SJL	70503	5 / 4.5	11 3/4" - 14"	121	55
SJL	70504	5 / 4.5	16" - 20"	233-180	105-81
SJL	70505	5 / 4.5	21" - 24 1/2"	283-253	128-115

Parts list SJL

Item	Description	Qty	SJL 70499Y*	SJL 70500Y*	SJL 70501Y*	SJL 70502Y*	SJL 70503Y*	SJL 70504Y*	SJL 70505Y*
1	Body	1	33013Y	33011Y1	33011Y2	33011Y3	33011Y4	33011Y5	33011Y6
2	Door	1	70487Y	70488Y1	70488Y2	70488Y3	70488Y4	70488Y5	70488Y6
3	Hinge pin	1	BJ33032	200050	200050	200050	200050	200051	200051
4	Hinge pin retainer	1	51604-18-C	200052	200052	200052	200052	50200053	50200053
5	Latch pin	1	BJ33035	BJ33035	BJ33035	BJ33035	BJ33035	BJ33035	BJ33035
6	Latch spring	1	7829-1	7829-1	7829-1	7829-1	7829-1	7829-1	7829-1
-	Safety latch assembly	1	70497	70497	70497	70497	70497	70497	70497
7	Safety latch	1	200026Y	200026Y	200026Y	200026Y	200026Y	200026Y	200026Y
8	Latch lock	1	200027 Y	200027Y	200027Y	200027Y	200027Y	200027Y	200027Y
9	Latch lock pin	1	70494	70494	70494	70494	70494	70494	70494
10	Latch lock pin retainer	1	51602-6-C	51602-6-C	51602-6-C	51602-6-C	51602-6-C	51602-6-C	51602-6-C
11	Latch lock spring	1	70495	70495	70495	70495	70495	70495	70495
12	Latch retaining pin assy	1	34439	34439	34439	34439	34439	34439	34439
13	Grease fitting	1	-	53201	53201	53201	53201	53201	53201

SJL/SPL-series lifting sling

Size	Frame
$2^{3}/8$" - $24^{1}/2$"	34568Y5

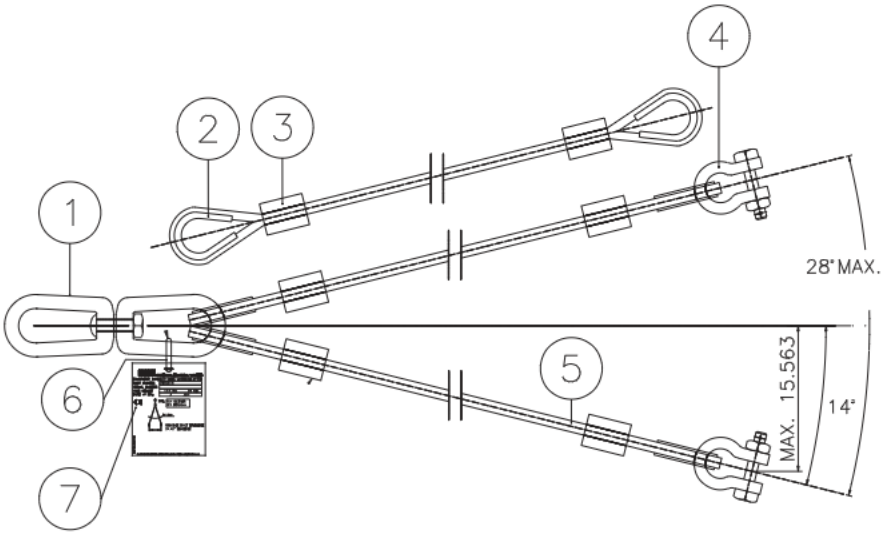

Item	Part Number	Description
1	979456-56	Regular swivel Min WWL. 6.26 tons
2	979457-18	Thimble
3	979458-18	Swage sleeve
4	979459-475	Shackle bolt type 3/4" 4.75 ton
5	979460-18	Cable 6 x 25 fw iwrc (179 KN)
6	50001125	Weld ring for id tag 50001124
7	50001124	ID tag 2-way lifting sling 34568-5

Suitable for assemblies:

200029	200030	200025	33044
200014	36174	70505	33043
200013	36173	70504	33042
200012	36385	70503	33041
200011	70252	70502	33040
200010	36172	70501	33039
200009	36171	70500	
200008	53615	70499	

SJX series

The SJX-single joint elevator is designed for running single joints of tubing and casing from the V-door to well center. The SJX-elevator is recommended to be used underneath the CRT Casing Running Tool. It enables the derrick-man on the monkey-board to open the elevator from 2 sides, depending on how the elevator is positioned when stopped.

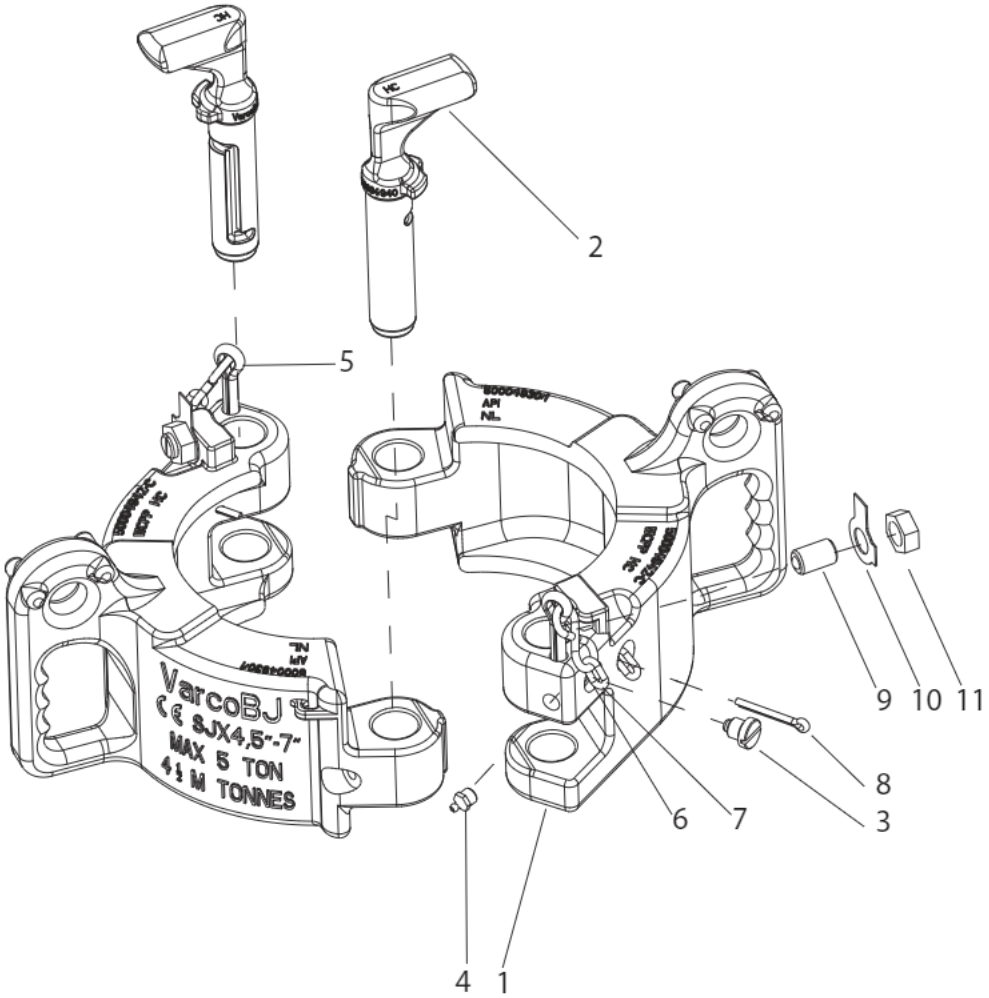

Parts list for SJX

Item	Description	Qty	2 3/8" - 4 1/2" 50004929	4 1/2" - 7" 50004931	7" - 10" 50004933	10" - 14" 50004935
1	Body	2	50004928-1	50004930-1	50004932-1	50004934-1
2	Lock key pin	2	50004940	50004940	50004940	50004940
3	Lock screw	2	50004939	50004939	50004939	50004939
4	Grease fitting	2	53201	53201	53201	53201
5	Cotter pin	2	50004950	50004950	50004950	50004950
6	S-hook	2	948051-2	948051-2	948051-2	948051-2
7	Chain	4	59001008-4	59001008-4	59001008-4	948051-2
8	Cotter pin	2	51403-12	51403-12	51403-12	51403-12
9	Ball nose spring plunger	2	59000251-6	59000251-6	59000251-6	59000251-6
10	Washer	2	979785-16	979785-16	979785-16	979785-16
11	Nut	2	50310	50310	50310	50310

SJX, rating according to API 8C

Size range (inch)	mm	Frame part number	Rating (ton / metric ton)	Weight (lbs / kg)
2.3/8" – 4.½"	60-114	50004929-*	5 / 4.5	37 / 17
4 ½" – 7"	114-178	50004931-*	5 / 4.5	44 / 20
7" – 10"	178-254	50004933-*	5 / 4.5	57 / 26
10" – 14"	254-356	50004935-*	5 / 4.5	67 / 30

* Casing / Tubing sizes bore codes according to below list

Part number	Bore codes	Plain		Upset
50004929	Y158	2.3/8"	Y159	2 3/8"
	Y160	2.7/8"	Y161	2 7/8"
	Y162	3.1/2"	Y163	3 1/2"
	Y164	4"	Y165	4"
	Y129	4.1/2"	Y167	4 1/2"
50004931	Y130	4.¾"		
	Y131	5"		
	Y132	5.1/2"		
	Y133	5.¾"		
	Y134	6"		
	Y135	6.5/8"		
	Y136	7"		
50004933	Y137	7.5/8"		
	Y705	7.¾"		
	Y139	8.5/8"		
	Y140	9"		
	Y141	9.5/8"		
	Y649	9.7/8"		
50004935	Y142	10.¾"		
	Y143	11.¾"		
	Y676	12.7/8"		
	Y144	13.3/8"		
	Y596	13.5/8"		
	Y690	14"		

SJH-series

The SJH Horizontal Pick Up elevator, designed to pick up tubular lying flat on a surface without having to lift the tubular prior to closing the elevator. The elevator is capable of lifting drill pipe, recessed/zip lift drill collars and casing. It will handle single joints of pipe straight from cantilever to off-line stand building system.

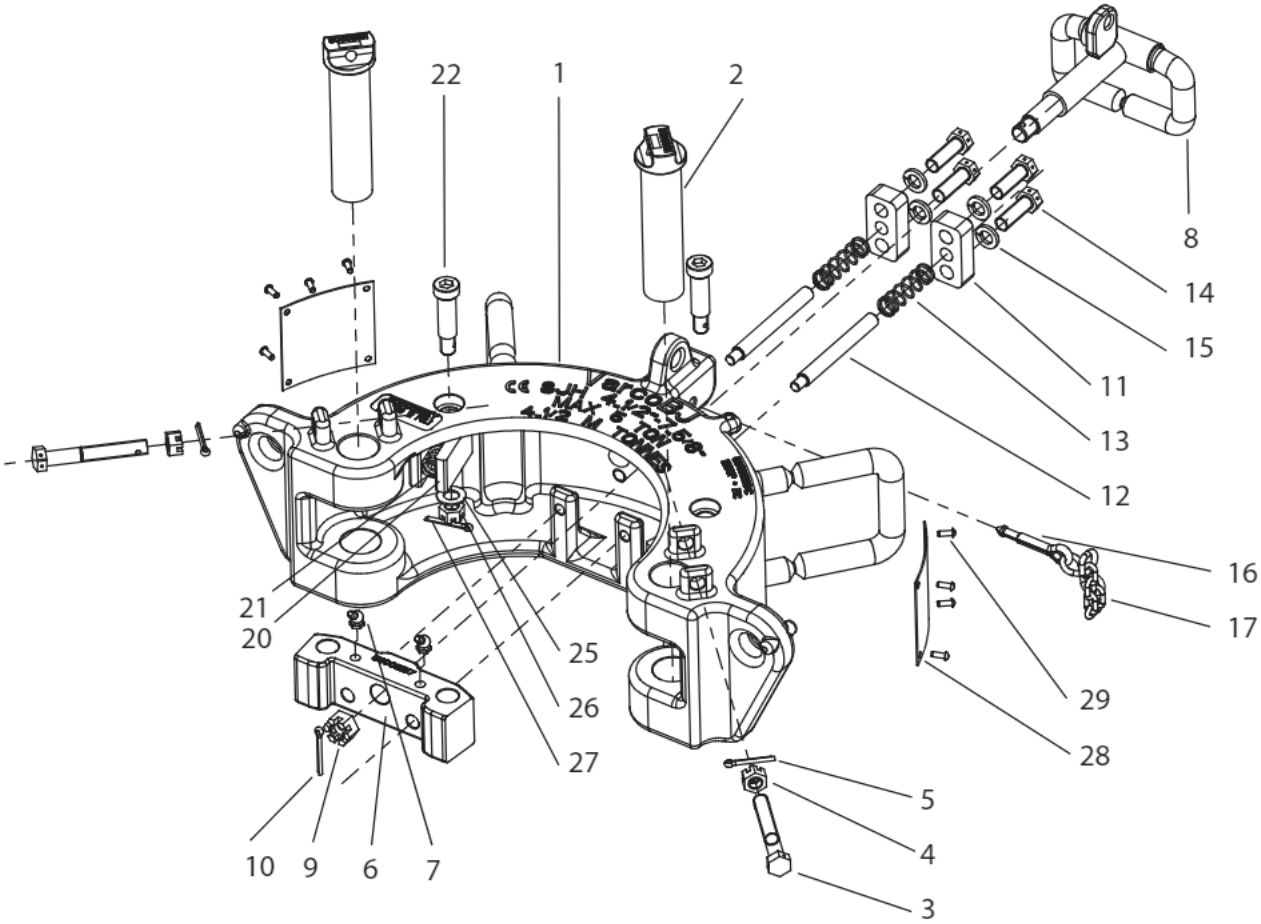

Parts list SJH-series

Ref. No	Description	Qty	2 3/8"-4 1/2"	4 1/2" - 7 5/8"	7" - 10 3/4"
			50003135Y	**50003155Y**	**50003175Y**
1	Body	1	50003136Y	50003156Y	50003176Y
2	Hinge pin	2	50003181	50003181	50003181
3	Retainer bolt	2	50003184	50003184	50003184
4	Nut	2	50508-C	50508-C	50508-C
5	Cotter pin	2	51435-10	51435-10	51435-10
6	Latch	1	50003137	50003157	50003177
7	Grease fitting	2	53202	53202	53202
8	Latch handle	1	50003180	50003180	50003180
9	Nut	1	50510-C	50510-C	50510-C
10	Cotter pin	1	51435-12	51435-12	51435-12
11	Spring retainer	11	50003179	50003179	50003179
12	Guidance pin	12	50003178	50003178	50003178
13	Spring	13	979386-75	979386-75	979386-75
14	Head hex screw	4	50008-12-C8D	50008-12-C8D	50008-14-C8D
15	Lock washer	4	50908-C	50908-C	50908-C
16	Cotter pin	1	50004950	50004950	50004950
17	S-hook	1	948051-2	948051-2	948051-2
18	Chain	1	59001008-4	59001008-4	59001008-4
19	Chain attachment bail	1	50003185	50003185	50003185
20	Spring retainer	2	50003139	50003182-2	50003182-2
21	Spring	2	979386-D22940	979386-78	979386-78
22	Bolt	2	51708-18-CD	50003182-1	50003182-1
23	Reducer	2	56700-8-2-S		
24	Grease fitting	2	53201		
25	Nut	2		50808-C	50808-C
26	Washer	2		50808-N-C	50808-N-C
27	Cotter pin	2		51435-10	51435-10
28	Warning Plate	2	203263	201646	201646
29	Drive screw	8	53301-10-8	53301-10-8	53301-10-8

SJH, rating according to API 8C

Frame #	Part number	Size range	Part number Jaws	Appr. weight (lbs / kg) incl jaws	Rating (ton / metric ton)
# 1	50003135	2 $^{3}/_{8}$" – 4 $^{1}/_{2}$ " tubing and drill pipe	50003148Y*	100 / 45	5 / 4.5
# 2	50003155	4 ½" – 7 $^{5}/_{8}$" tubing and drill pipe	50003189Y*	111 / 50.5	5 / 4.5
# 3	50003175	7" – 10 ¾" casing	50003150Y*	132 / 60	5 / 4.5

* Refer to **Jaw set #** numbers in the following tables.

Size components SJH 2.3/8” - 4.1/2” pn 50003135Y*

		90°	5°	12°
Size Tubing	**Type upset**	**Jaw set #**	**Jaw set #**	**Jaw set #**
2-3/8”	Plain	158	5238	12238
	Upset	159		
2-7/8”	Plain	160	5278	12278
	Upset	161		
3-1/2”	Plain	162	5312	12312
	Upset	163		
4”	Plain	164	5400	12400
	Upset	165		
4-1/2”	Plain	129	5412	12412
	Upset	167		

		18°
Size Drill Pipe	**Type upset**	**Jaw set #**
2-3/8”	IU	-
	EU	116
2-7/8”	IU	117
	EU	118
3-1/2”	IU	119
	EU	120
4”	IU	121
	EU	122
4-1/2”	EU	123

Size components SJH 4.1/2” - 7.5/8” pn 50003155Y*

	90°	5°
Size Casing	**Jaw set #**	**Jaw set #**
4-1/2”	129	5412
5”	131	5500
5-1/2”	132	5512
5-3/4”	133	-
6”	134	-
6-5/8”	135	5658
7”	136	5700
7-5/8”	137	5758

		18°
Size Drill Pipe	**Type upset**	**Jaw set #**
4-1/2”	IU	122
	EU	123
5”	IU	123
5-1/2”	IEU	124
5-7/8” (6” upset)	IEU	789
6-5/8	IEU	782

Size components SJH 7” - 10.3/4” pn 50003175Y*

	90°	5°
Size Casing	**Jaw set #**	**Jaw set #**
4-1/2”	129	na
5”	131	na
5-1/2”	132	na
7“	136	5700
7-5/8”	137	5758
8-5/8”	139	5858
9	140	5900
9-5/8”	141	5958
10-3/4”	142	51034

DC DOLLY

Partnumbers

Part Number	Size [inches]
18°type	
31189Y1	4.1/2" IF & 5" IEU
31189Y7	3.1/2" IF, Reg & FH
31189Y10	5.1/2" IEU -18
31189Y18	5.7/8" IEU -18
Collar type	
31189Y3	4.1/2" IF & 5" IEU
31189Y5	4" IF & 4.1/2" Reg & FH
31189Y9	4 FH
31189Y12	3.1/2" IF & 5" IEU
31189Y15	6.5/8" EU
31189Y16	2.7/8" Plain

Parts

	31189Y1		31189Y7		31189Y10		31189Y18		31189Y3	
Part Description	**Part**	**Qty**	**Part**	**Qty**	**Part**	**Qty**	**Part**	**Qty**	**Part**	**Qty**
D.C.lift dolly PSL1	31189Y1	1	31189Y7	1	31189Y10	1	31189Y18	1	31189Y3	1
Pin D-C dolly ass'y.	5227	2	5227	2	5227	2	5227	2	5227	2
Plug,external pipe-countersunk Hex	53000-12	2	53000-12	2	53000-12	2	53000-12	2	53000-12	2

	31189Y5		31189Y9		31189Y12		31189Y15		31189Y16	
Part Description	**Part**	**Qty**	**Part**	**Qty**	**Part**	**Qty**	**Part**	**Qty**	**Part**	**Qty**
D.C.lift dolly PSL1	31189Y5	1	31189Y9	1	31189Y12	1	31189Y15	1	31189Y16	1
Pin D-C dolly ass'y.	5227	2	5227	2	5227	2	5227	2	5227	2
Plug,external pipe-countersunk Hex	53000-12	2	53000-12	2	53000-12	2	53000-12	2	53000-12	2

Lubrication and maintenance

Safety

CAUTION: Practice safety in all performances of operation and maintenance and use approved safety methods, materials and tools. Keep hands away from any pinch point or undesignated areas; use provided handles for operating the elevator.

WARNING: Elevators which have experienced wear beyond established wear criteria set by OEM, or are found to have cracks must be replaced or repaired by a NOV authorized repair facility.

WARNING: Only original NOV parts must be used. Elevators are produced from cast alloy heat treated steel and must not be welded in the field. Improper welding can cause cracks and brittleness in heat-affected areas which can result in dramatic weakening of the part and possible failure. Repairs involving welding and/or machining should be performed only by an NOV authorized repair facility. Using an Elevator that has been improperly welded or repaired is dangerous.

NOTE: The owner and user together with the manufacturer should jointly develop and update inspection, maintenance, repair and remanufacture procedures consistent with equipment application, loading, work environment, usage and other operational conditions.These factors may change from time to time as a result of new technology, equipment history, product improvements, new maintenance techniques and changes in service conditions. Alternatively, NOV recommends using the Periodic inspection and maintenance Categories and Frequencies as mentioned in API RP8B Table 1. Detailed instructions for maintenance according to API RP8B Table 1 are outlined in this chapter.

General maintenance notes

Recommended General Purpose EP grease

Lube code description	Above -20° C	Below -20° C
Castrol	MP grease	n/a
Chevron	Avi-Motive	Avi-Motive W
Exxon	Lidok EP2	Lidok EP1
Gulf	Gulfcrown EP2	Gulfcrown EP1
Mobil	Mobilux EP2	Mobilux EP1
Shell	Alvania EP2	Alvania EP1
Texaco	Multifak EP2	Multifak EP1
Union	Unoba EP2	Unoba EP1

Use extreme pressure lithium based, multi-purpose grease of no. 1 or 2 consistency and 10 W 30 or 10 W 40 multi- grade motor oil to lubricate NOV elevators.

Greasing the inserts and insert slots.

NOTE: To reduce the chance of inserts seizing in the insert slots, NOV recommends to remove inserts after each job, coat the insert slot with light machine oil, EP-2 grease or any other fluid that does not affect the friction coefficient with string weight compared to a none coated insert slot.

WARNING: No grease or pipe dope should be used for lubricating the inserts and insert slots as this will reduce the friction coefficient resulting in higher loads on the slip toe and thus higher stress.

Load test

WARNING: NOV elevators are load tested after manufacture or repair. Load testing is mandatory on elevators which have not been load tested before. Load testing is required on elevators which have been overloaded, for example jarring operations or operations that have induced elevators to high accelerations or high impact loads.

Inspection (as outlined in API-RP8B)

Daily inspection (cat II, elevator in use)

Visually inspect and repair when needed.
1. Check for worn and damaged parts
2. Check for loose and missing parts
3. Check condition of the latch spring and the latch lock spring
4. Check condition of other springs when present
5. Check for wear of the hinge pins by checking the vertical play between latch, body and door
6. Open and close the elevator 5 times slowly and 5 times quickly. Check that the elevator works flawlessly without interference
7. Check state of lubrication
8. Check for any visible cracks
9. Check for any corrosion on all pins and springs
10.Check good condition of all primary and secondary retention
Additional inspection schedule for Y series elevators
11.Check for proper slip movement by pressing the slip downward. The slips should come up upon release assuring proper condition of the slip springs
12.Check that all 4 rubber bushings are installed under the slip setting ring. Replace if needed.
13.Brush inserts clean and check for wear and missing teeth.
14.Check slip setting ring for spreading and wear in the seating area.
Additional inspection of SJX-series elevators (see explded view chapter Drawings)
15.Check for proper working, adjustment and retention of the ball nose spring plunger(s)
16.Check for presence and proper retention of the lock pin screw(s)

Semi-Annual (6 mths) inspection (cat III, elevator in use)

If ANY suspicion is risen about the condition of the elevator, carry out a category IV-inspection.

Inspection except SJH/SJX series elevators
1. Open and close the elevator 5 times slowly and 5 times quickly. Check that the elevator works flawlessly without interference
2. Try to open the latch by prying the latch between body and latch with a steel bar or screw driver, the latch lock must prevent the latch from being opened (figure 1)
Wedge elevator (figure 2a, 3, 5)
3. Check that latch is not forced outwards when elevator is wedged open
4. Check there is clearance between latch and door lug at the top (figure 3)
5. Check latch and lug faces make contact and are parallel (figure 4)
6. Check that the lock hook has clearance all around the lug pin (figure 5)
Hang elevator in open position tilted forward
7. Check for correct fixation of the top of the latch spring stop pin
8. MPI the lifting ears/link ears
Inspection of SJH-series elevators
9. Open and close the elevator 5 times slowly and 5 times quickly. Check that the elevator works flawlessly without interference
10.MPI the lifting ears / jaws

Annual Inspection (cat IV, elevator in use)

Yearly Inspection or when any suspicious of overload is risen.

1. Carry out the category III inspection + a full magnetic particle Inspection of all primary load bearing load components:

- Hinge/latch pin
- Body
- Door
- Latch
- Slips (from slip type elevators)

(see Critical Area Drawings for cast parts)

2. when no Critical area Drawing is available, the complete part is considered critical

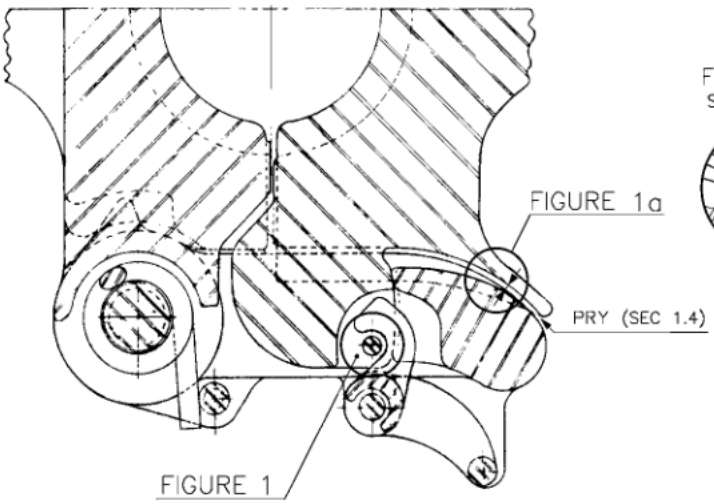

FIGURE 1a
SCALE 2:1

FIGURE 1
SCALE 2:1

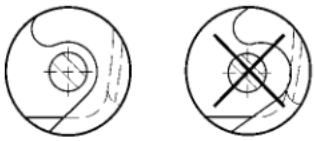

Correct
Wrong

FIGURE 2a
SCALE 2:1

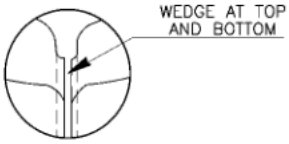

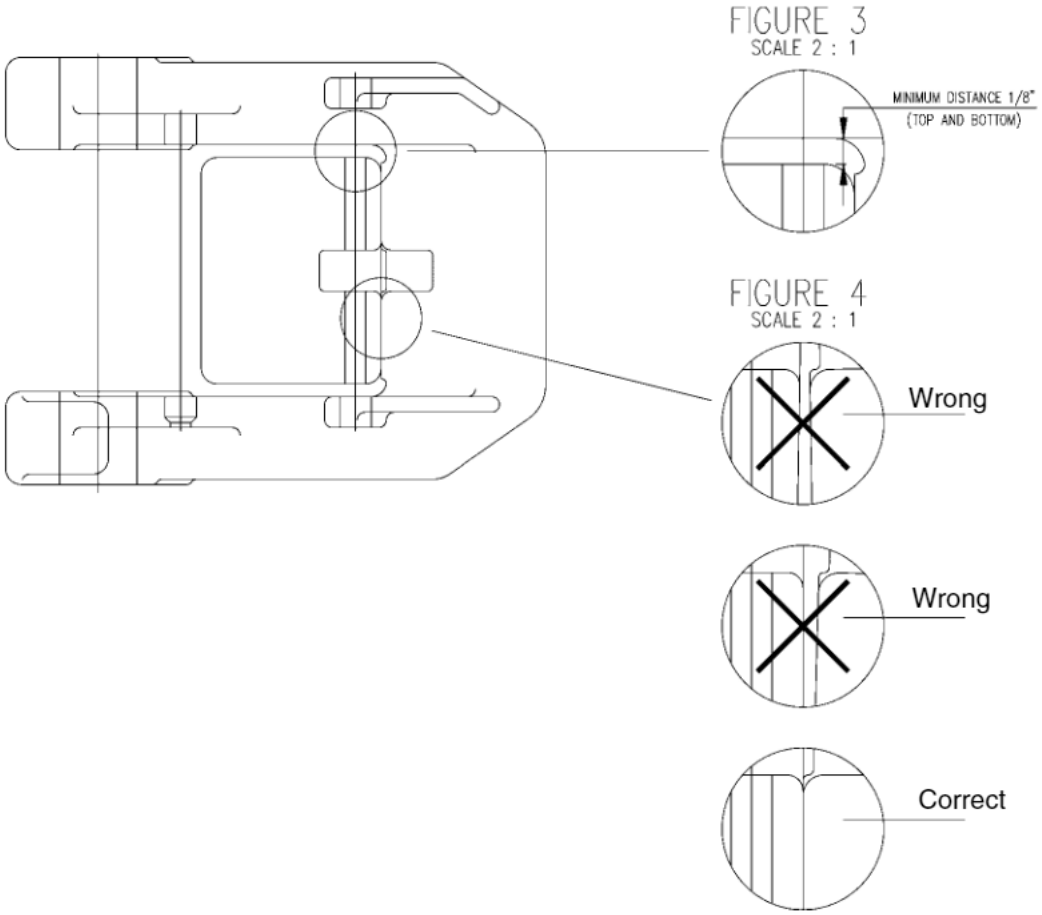
FIGURE 3
SCALE 2 : 1
MINIMUM DISTANCE 1/8"
(TOP AND BOTTOM)
FIGURE 4
SCALE 2 : 1
Wrong
Wrong
Correct

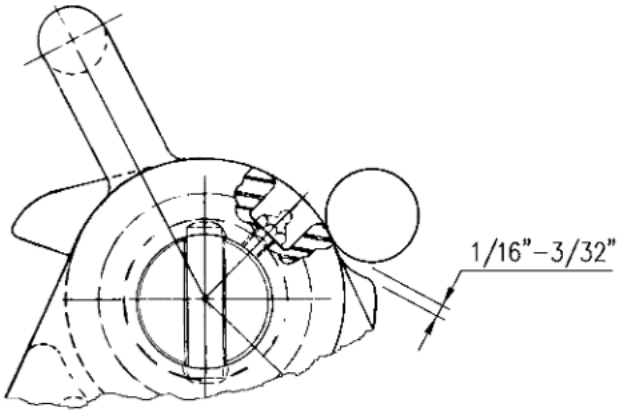
1/16"–3/32"

FIGURE 5

Drill collar with zip-lift recess bore acc. to API RP-7G

The bore of new elevators is according the following table.

Drill collar O.D. range	Top bore	Bottom bore	Bevel on top bore
4” to 4-5/8”	O.D. minus 5/16”	O.D. plus 1/8”	1/16”
4-3/4” to 5-5/8”	O.D. minus 3/8”	O.D. plus 1/8”	1/16”
5-3/4” to 6-5/8”	O.D. minus 1/2”	O.D. plus 1/8”	1/16”
6-3/4” to 8-5/8”	O.D. minus 9/16”	O.D. plus 1/8”	3/32”
8-3/4” and larger	O.D. minus 5/8”	O.D. plus 1/8”	1/8”

Table 1

Bores for drill collar size	Maximum wear
<= 5-5/8”	New bore + 1/32”
> 5-5/8”	New bore + 1/16”

Table 2

Example:

1. A new bore 4’ drill collar with zip lift recess has a 4” minus 5/16” (see table 1) = **3-11/16”** top bore maximum.
2. The maximum allowable size is **3-11/16”** plus **1/32”** (see table 2) = **3-23/32”.**

NOTE: See chapter “Drawings” for tables of maximum diameters

How to calculate collar type bore for casing and tubing

Nominal Casing or Tubing Size, D [inch]	Formula for New Top Bore [inch / mm]
D < 4 1/2 “	1.001 x (D x 25.4) + 1.88 mm / (1.001 x D + 0.074”)
4 ½ “ <= D < 9 5/8 in	1.0125 x (D x 25.4) + 1.22 mm / (1.0125 x D + 0.048”)
9 5/8 in <= D < 12 7/8 “	1.0125 x (D x 25.4) + 0.89 mm / (1.0125 x D + 0.035”)
12 7/8 “ <= D <= 20 in	1.0125 x (D x 25.4) + 0.56 mm / (1.0125 x D + 0.022”)
20 in < D < 42 “	1.010 x (D x 25.4) + 1.90 mm / (1.010 x D + 0.075”)
42 “ <= D	1.010 x (D x 25.4) + 3.18 mm / (1.010 x D + 0.125”)

Tool joint wear data drill-pipe

Procedure

1. Determine the center bore diameter of the bushing in inches (size **C**)
2. The maximum wear on the diameter of the center bore: Nominal size + 0.25 inch
3. In the table, follow the line corresponding with the rating of the elevator (in short tons)
4. On the left hand side, read out the minimum required tool joint diameter (Y) in inches that can be handled safely with the elevator.

As soon as the tool joint diameter falls below the corresponding rating line, the bushing or the pipe must be changed.

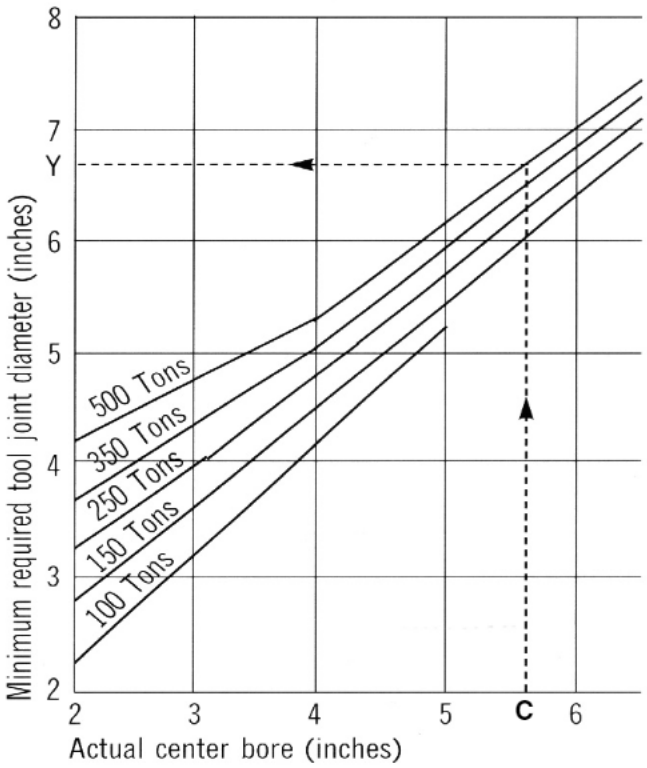

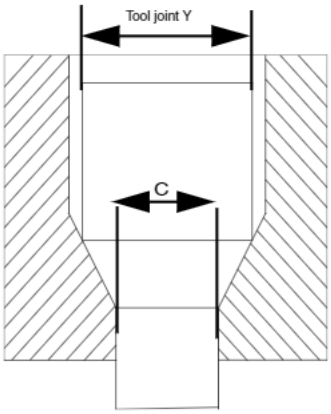

Lubrication

Daily lubrication (elevator in use)

NOTE: Lubricate regularly during usage and storage to prevent corrosion from attacking any part of the elevators operating mechanism.

Routine lubrication should be completed prior to use.
1. Grease hinge, latch and latch lock pin.
2. Grease hinge and latch pin through grease nipples
3. Grease underside of link arms.
4. Grease top bore, taper surface or back of slips
5. Grease springs.
6. Grease link retainer fasteners.

Additional daily lubrication SJH (Elevator in use)

Additional daily Lubrication (when in use)
1. Apply grease in the grease nipples of the jaws. Grease should visible come out.
2. Grease the machined surface of the latch and jaw + positioner

Lubrication prior to storage

All exposed, not painted metal surfaces, are coated with a rust preventative coating at the factory prior to shipment. When the elevator is not being used for a longer period then 3 days the following steps should be carried out.

Procedure

- Clean the elevator
- Grease the elevator as described in chapter lubrication.
- Grease all blank parts. Recommended rust preventative (shushing compound) for bare metal surfaces is Kendall Grade 5 (GE-D6C6A1) or equivalent
- Check periodically to ensure no corrosion is taking place.

Wear criteria general notes

WARNING: The inspection criteria and maximum wear allowances contained in this (these) documents are only valid when the related equipment is in otherwise condition, has not been misused, and does not have excessive wear, cracks or other defects, or previous weld repair. These inspection criteria and maximum wear allowances apply only to certain critical components and, as such, cannot on their own determine the overall condition of the equipment and its suitability for continued use

General dimensions

CAUTION: Ensure dimensions and requirements are according to API RP-7G

Casing & tubing

CAUTION: Wear data are applicable for lifting casing & tubing with regular coupling with dimensions and tolerances according to API 5-CT

Y, G, X, A, SJL, SPL-series wear data

See chapter “Drawings”.

Wear data SJX

Hole clearance hinge pins max. 0,032”

Magnetic Particle Inspection

Annual inspection (elevator in use)

Annual Inspection.
1. Clean the surface from oil, grease, sand, paint and loose rust which may interfere with satisfactory inspection.
2. Carry out MPI according to ASTM E709, determine the type of defects and the degree by comparing defects to ASTM E125 reference photographs to NOV acceptance criteria.
3. Review the found defects and determine acceptability as per tables below
4. Examinations must be performed according to the continuous method, with sufficient overlap to ensure 100% coverage of the area or part under inspection.

NOTE: Only a NOV authorized repair facility is allowed to remanufacture elevators which have indications outside the acceptance criteria.

Non-destructive examination

NOV elevators should be MPI examined according to the maintenance procedures. This magnetic particle examination should be conducted as outlined in the latest revision of the recommended practice API RP 8B as a minimum. The magnetic particle examination method consists of magnetizing the area to be inspected and then applying magnetic particles to the surface of the test area.

Evaluations of indications

Relevant indications: Only those indications with major dimensions greater than 1/16 Inch (1.6 mm) and associated with a surface rupture shall be considered relevant. Relevant indications are indications that results from, discontinuities within the test part. Non relevant indications are indications that results from excessive magnetizing current, structural design or permeability variances within the test parts. Any indication believed to be non-relevant shall be regarded as relevant and shall be re-examined to determine whether an actual defect exists. Linear indications shall be considered as those having a length of more than three times the width. Rounded indications shall be considered as those having a length less than three times the width. A lined indication shall be considered as a group of three more indications which touch an imaginary straight line connecting any two of the group.

For equipment delivered in accordance with API 8A & 8C PSL 1

Type	Discontinuity description	Max. degree critical areas	Max. degree non-critical areas
I	Hot tears, cracks	None	Degree 1
II	Shrinkage	Degree 2	Degree 2
III	Inclusions	Degree 2	Degree 2
IV	Internal chills and chaplets	Degree 1	Degree 1
V	Porosity	Degree 1	Degree 2

For equipment delivered in accordance with API 8C PSL 2

Type	Discontinuity description	Max. degree critical areas	Max. degree non-critical areas
I	Hot tears, cracks	None	None
II	Shrinkage	None	Degree 1
III	Inclusions	Degree 1	Degree 2
IV	Internal chills and chaplets	None	Degree 1
V	Porosity	Degree 1	Degree 2

NOTE: Only a NOV facility or an authorized repair facility is allowed to repair elevators which have indications outside the acceptance criteria.

Installation and commissioning

Installing the elevators

WARNING: Lift the elevator by the link ears only and never use other points to lift.

NOTE: An elevator balancing strap may be used to adjust the tilt of the elevator. In general, it is desirable to have the handles pointing downward when open, so that the operator is in effect, lifting the elevator when closing.

All link ear type elevators (G, Y, X & A-series)

Procedure

- Lift the elevator to drill floor by using a two-legged sling or chain around the link ears. Make sure the link block retainer bolts are installed and secured when lifting.
- Place the elevator on the drill floor as close as possible to well center.
- Open the link blocks by removing the lower link block bolt assembly.
- Push the links in position around the elevator ears and close the link blocks
- Install the link block bolt and slotted nut.
- Secure the nut with a new cotter pin.

SJL/SPL type elevators

Procedure

- Connect a swivel suspension assembly to the ears of the elevator by use of shackles.
- Connect the swivel suspension assembly to the tugger line on the throat of the hook.

SJX (in combination with CRT)

Procedure

- To install the SJX-elevator, use the safety lines underneath the CRT
- Suspend the SJX using proper sized shackles
- Ensure the shackles have sufficient freedom of movement

SJX as a stand alone elevator

Procedure

- To install the SJX-elevator, use a tugger line with a 2-way lifting sling
- Suspend the SJX using proper sized green pin shackles
- Ensure the shackles have sufficient freedom of movement

SJH type elevator

Procedure

- To install the SJH-elevator, use a tugger line with a 2-way lifting sling
- Use a separate balancing strap for the center shackle

Cross-over list

When using 6-9" and or 9 1/8-13 3/8" check capacity links

"Old" Frame Number	Capacity	"New" SMX Frame Number	Capacity Ton	SMX Size Range	SMX suitable for Link sizes
31239Y 5.5 - 5.75"	150 ton	50006430Y	150	3 1/2 - 5 3/4"	fits 250 & 350 ton
33809Y	100 ton	50006430Y	150	3 1/2 - 5 3/4"	fits 250 & 350 ton
33854Y	100 ton	50006430Y	150	3 1/2 - 5 3/4"	fits 250 & 350 ton
31239Y 6 - 8.625"	150 ton	50006400Y	150	**6 - 9"**	**fits 250 & 350 ton**
33950Y 8.875 - 9"	150 ton	50006400Y	150	**6 - 9"**	**fits 250 & 350 ton**
		Alternative when user wants to hang off 500 ton links			
		50006426Y	250	6 thru 9"	fits 250, 350 & **500** ton
71273Y	250 ton	50006426Y	250	6 thru 9"	fits 250, 350 & 500 ton
71274Y	250 ton	50006426Y	250	thru 9"	fits 250, 350 & 500 ton
33950Y 9.125 - 10.75"	150 ton	50006455Y	150	**9 1/8 - 13 3/8"**	**fits 250 & 350 ton**
33982Y 11.75 - 13.375"	150 ton	50006455Y	150	**9 1/2 - 13 3/8"**	**fits 250 & 350 ton**
		Alternative when user wants to hang off 500 ton links			
		50006740Y	250	9 1/8 - 13 3/8"	fits 250, 350 & **500** ton
29965Y 9 5/8 - 13 3/8"	350 ton	50006440Y	350	9 1/8 - 13 3/8"	fits 250, 350 & 500 ton
71274Y	250 ton	50006440Y	350	9 1/8 - 13 3/8"	fits 250, 350 & 500 ton
71275Y 13 1/2 - 14"	250 ton	50006450Y	250	13 1/2 - 17 7/8"	fits 250, 350 & 500 ton
33982Y 13 1/2 - 13.625"	150 ton	50006450Y	250	13 1/2 - 17 7/8"	fits 250, 350 & 500 ton
34807Y	150 ton	50006450Y	250	13 1/2 - 17 7/8"	fits 250, 350 & 500 ton
33632Y 16.75"	150 ton	50006450Y	250	13 1/2 - 17 7/8"	fits 250, 350 & 500 ton
33632Y 18 - 20"	150 ton	50006460Y	250	18 - 24.5"	fits 250, 350 & 500 ton
30598Y 18.625 - 20"	250 ton	50006460Y	250	18 - 24.5"	fits 250, 350 & 500 ton
34175Y 22-24"	250 ton	50006460Y	250	18 - 24.5"	fits 250, 350 & 500 ton

Operation

WARNING: The elevator is being used in a zone 0 - 2 environment. Please apply to all rules and legislation while working within these zones.

WARNING: Keep hands away from any pinch point or undesignated areas; use the green handles, if applicable, provided for operating the Elevators.

WARNING: If the elevator is damaged, has become deformed, doesn't function properly, take it out of service.

WARNING: During operation; always ensure the elevator is properly closed and when applicable the "closed & lached verification pin" is in place.

WARNING: Do not use elevators for any other purpose than for lifting the pipe type as described in the chapter "General specifications".

WARNING: Do not pick up tubular with a standard elevator, except with a SJH, SJX, SPL, SJL or any other side door elevator with a "latched and locked verification pin".

Crushing load

The grade + wall thickness (tubing) & grade + contact area vs. elevator bore (collar type & 18° pipe) of the pipe determines the maximum string weight an elevator can handle. E.g. while running a low grade pipe with a Y-series slip type elevator, it is thinkable that the pipe crushes well below the pipe weight reaches the rated load of the elevator. In general it is also possible that the joints of the pipe can't take the load of the string and are torn apart. The load shoulder of the tooljoint may be sheared of or get damaged when using an OD which is too small.

In other words; The pipe determines in most cases (grades equal or below grade 110) how much weight can be run, the elevator doesn't. The rating of an elevator gives the maximum safe workload, but doesn't tell you how much weight of a certain brand/type of pipe it can handle. Contact your pipe manufacturer for more details.

Maximum allowable hook load to prevent crushing of casing

S = Pipe yield strength (Grade) in psi

A = Pipe cross-sectional area in inch^2

D = Pipe outside diameter in inch

L = insert height in inch

K = crushing factor = 2.6

Crushing factor = 1/tan (a+b)

a= slip back angle

b = friction angle

$$F = \frac{AxS}{\sqrt{1+\left[\frac{DxK}{2L}+\left\langle\frac{DxK}{2L}\right\rangle^2\right]}}$$

F in Lbs.

The K-factor is assumed based on a friction coefficient of 0.2 between slip and bowl. In practice on a rig the friction could deviate from this 0.2; a lower friction leads to a lower allowable crushing load. The formula does not incorporate a safety factor.

Routine functional test prior to operation

Check the elevator daily and/or prior to use.

Procedure

- Visually inspect the elevator for loose and missing parts.
- Visually inspect the elevator for cracks. Remove from service in case of cracks.
- Visually inspect the elevator for corrosion. Replace corroded parts.
- Check the condition of the hinge pins, latch pins and latch lock pins
- Check springs for knicks, burrs, pitting or cracks. Ensure springs are not painted and properly greased.
- Open the elevator and check the hinge pin and latch pin for wear
- Close the elevator and check the proper functioning of the latch for at least 10 times
- Check the elevator for proper operation of the latch stop mechanism. Latch should not stop against the body when engaged
- Check for wear of the wear bushings and that the wear bushing is to be replaced before it is worn down to the diameter of the elevator's metal through bore.

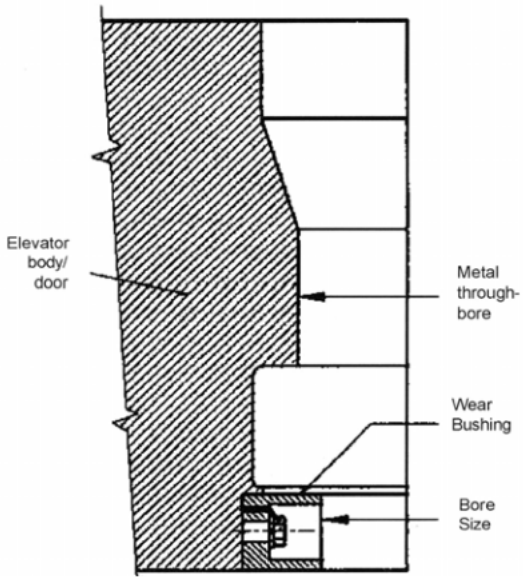

Routine lubrication prior to operation

The following lubrication should be completed daily and/or prior to use.

Procedure

- Grease hinge pin, latch and latch lock pin
- Grease any part via existing grease nipples
- Grease underside of link ears
- Grease top bore, taper surface and/or back of slips
- Grease springs
- Grease link retainer fasteners

Operation of Y, G, X, A, SJL & SPL-series

Procedure

1. The door is opened by gripping the latch lock and pulling outward. This automatically releases the latch lock assembly and latch so the elevator can be positioned on the pipe.
2. When the elevator is properly closed around the pipe, the latch locks automatically.
3. The latch spring is designed to latch the elevator and hold it closed under normal operating conditions.
4. The latch lock provides additional security and assures the latch will remain closed under normal, loading conditions.
5. Ensure the latch lock verification pin is in place ensuring the latch lock can not open and the latch is actually locked.

WARNING: When picking up pipe (not Y-type), ensure the doors are pointing upwards, preventing the full pipe load from being transferred via the latch and latch lug. At all times check if the verification pin is present (if applicable).

Operation notes Y-series elevator

WARNING: <u>Y-type elevator:</u> Never use the Y-series slip type elevator to run drill pipe.

CAUTION: Do not use YT or YC elevators due to limited capacity on semi's and rigs with 40 foot floors where an increased possibility of dynamic loading exists. In this case, use HYT, MYC or HYC elevators.

NOTE: The slips of Y series elevators will set when the elevator is raised against the tool joint, which pushes down on the slip-setting ring

Slip removal

Procedure

1. Remove top and bottom guide plate and slip setting ring by unscrewing the retainer bolts.
2. Remove slips, starting at latch end and proceeding clockwise, by removing the 4 slip bolts.
3. Unscrew the insert retainer bolts to remove insert retainers and drive the inserts out using a brass punch and hammer.

To assemble the elevator slips reverse the above procedure taking the following into consideration:

- Install the correct size inserts and top and bottom guide,
- Secure all bolts and screws with lock wire where applicable.
- Place setting ring on body side
- Check slips for free movement and for gap between slip segments in the set position.
- Check slip inside diameter with slips in raised position as shown in chapter “Wear Data”.

Opening and closing (elevator without verification pin)

Step 1: Elevator is completely closed and locked.

Step 2: Gripping the elevator.

With your right hand you grip the right hand handle on the door.

With your left hand you grip the handle on the latch lock.

Step 3: Opening the latch lock.

Pull with your left hand on the handle of the latch lock to open it. By the resistance of the handle you feel when the latch lock is at the end of its stroke. At this moment the latch lock is disengaged.

Step 4: Opening the latch.

When the latch lock is at the end of its stroke, you have to increase the force on the handle to subsequently open the latch.

Step 5: Opening the elevator.

Keep on pulling with your left hand on the handle of the latch lock.

Once the latch is opened, you will automatically open the elevator in the same movement.

Step 6: Closing the elevator.

With your right hand you grip the handle on the door.

With your left hand you grip the handle on the body

Push the two handles towards each other.

In one movement you will close the elevator, engage the latch and engage+ lock the latch lock.

Step 7: Verification that the elevator is properly closed, latched and locked.

The elevator is properly latched when the latch falls against the body

The latchlock is properly locked when the latchlock falls completely within the contour of the latch.

Opening and closing (elevator with verification pin).

The opening and closing sequnce is principally the same as for elevator without verification pin.

Situation 1: Opening with verification pin installed

1. Opening the elevator can NOT take place when the verification pin is in verification position

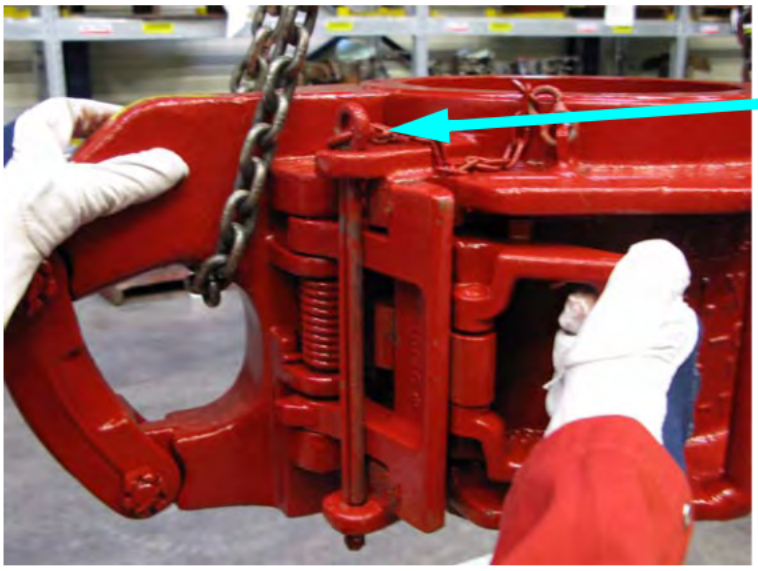

Situation 2: Opening with verification pin removed.

2. Opening the elevator can only take place when the verification pin is removed from the verification position. The verification pin should be stored in the storage position tp prevent the pin to get damaged.

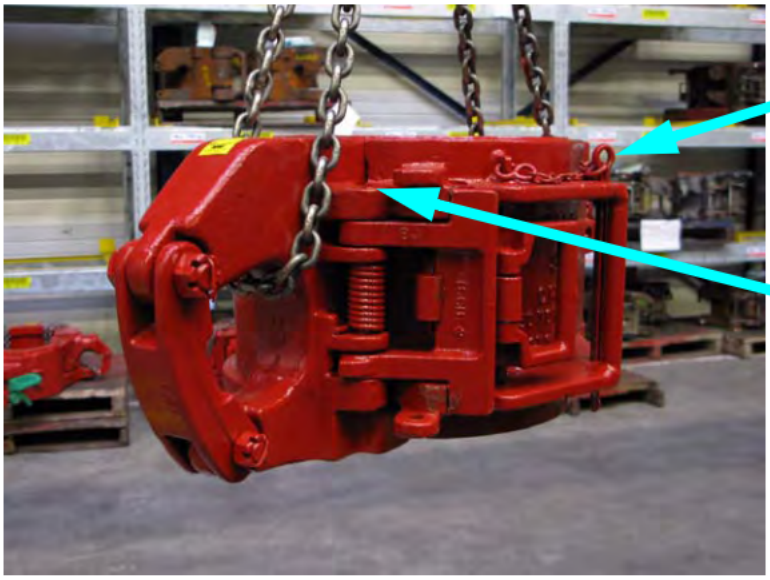

Situation 3: Fitting verification pin while elevator is not fully closed, latched and locked.

3. It is NOT possible to insert the verification pin unless the elevator is closed, latched and locked. Observe the gap between body and door.

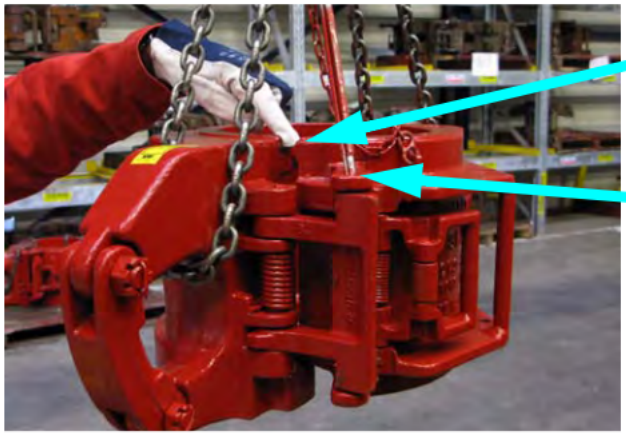

Situation 4: Inserting verification pin prior to closing the elevator.

4. Closing the elevator with verification pin inserted prior to closing, prevents the closing sequence to be finished. Observe the gap between body and door.

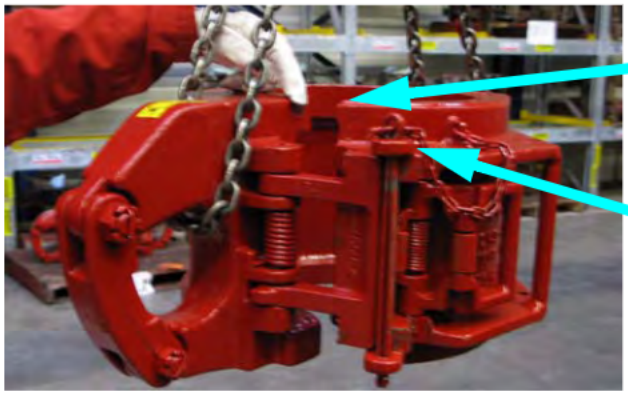

Situation 5: Closing elevator with failing latch spring, verification pin inserted.

Closing the elevator with verification pin inserted prior to closing when latch spring fails, prevents the closing sequence to be finished. Observe the gap between body and door.

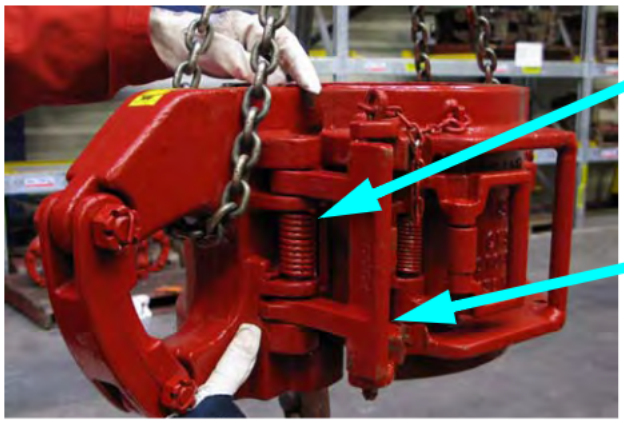

Operational notes on SPL-series elevator

Procedure

CAUTION: SPL-elevator; Do not run the SPL into the tool joint at high pick up speed. Do not use on square shoulder tubulars.

1. Verify that the insert angle is the same or no more than 2 degrees greater than the upset angle
2. Measure the most worn tubular box and measure the internal diameters between the inserts. Verify that the most worn box outside diameter is at least 0.4” greater that the internal diameter between the inserts.

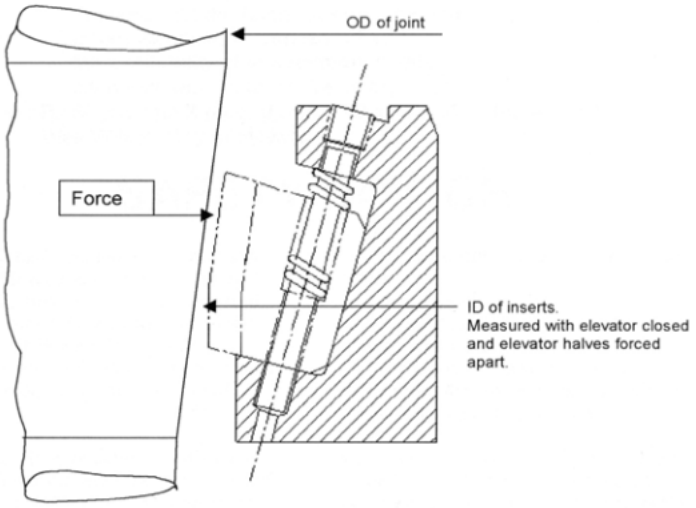

Recommendations

1. Make sure to use the lifting handles provided for opening, closing and handling the elevator. Keep hands away from all other areas when the elevator is in use.
2. Check the latch and latch lock for full engagement when closed around the pipe
3. Ensure the “latched-and-locked verification pin” (cotter pin) is engaged.
4. When utilizing slip type elevators to lift tubular the driller should slowly lift the elevator until the slip setting ring has engaged the coupling of the tool joint and the slips are fully set. Rapid lifting prior to the slips being fully set may result In the pipe collar dropping onto the slip setting ring, resulting in the full weight of the pipe stand impacting the elevator. This may result in damaging the elevator and could result in the pipe being dropped, thus causing injury to rig result personnel and damage to other equipment.
5. Make sure all slip segments are free in the up position when latching the elevator. If any of the segments are stuck in the down position, the elevator may not close properly
6. Make sure the elevator and slip bodies are used with the correct size tubular (per API specification). Oversized pipe will cause difficulties such as latching partially or not at all. Undersized or oversized pipe could cause uneven stress distribution, inadequate load bearing area, and possible wedging in the slip setting ring.

Operational notes SPL-series elevator

WARNING: SPL-elevator: if the pipe is off center or heavy to one side, the weight of the slips is not sufficient to center the pipe, thus the potential for a negative stack up or pipe dropping to occur, because the slips will try to set on the leading edge of the right and left slip segment to the pipe. In this case, position the slips in such a way that the pipe off center is to the opening on the SPL frame to assure proper setting of slips.

Operational notes SMX-elevator

Ensure that the elevator is closed when not using it, e.g. when it is stored on the rig floor.

Procedure opening

1. Grab the handle on the link (recommended) with the left hand.
2. Grab the cam latch lock with your right hand and simultaneously push the verification lock down (60°) with finger tips.
3. Pull the door open to the right. .

2) Pull the cam latch lock for opening the door

1) Open the verification lock

Procedure closing

1. Close the door by grabbing the link handle on the link with the left hand.
2. Grab the cam latch lock on the door with the right hand and push to close the door.

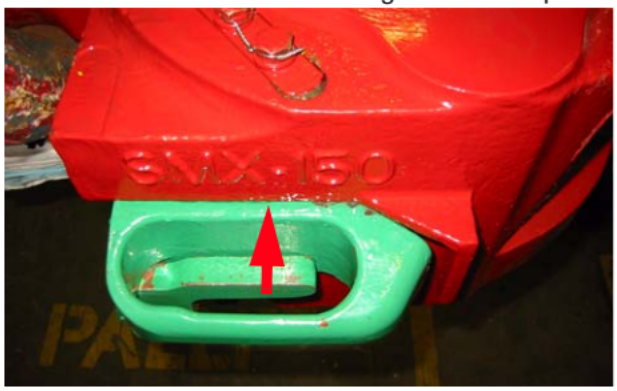

Rotate vertification lock in horizontal position.

3. Rotate the verification lock to a horizontal position.

WARNING: Always ensure the door is closed properly and the verification lock is in the correct (horizontal) position.

Operation of the SJH-elevator

Procedure closing

- Open the jaws by pulling the center handle.
- Lower the SJH elevator over the pipe, just below the tool joint, pin box or upset, ensure the centre of gravity is on the right side of the elevator
- The jaws will automatically close under weight of the elevator.
- Use the latch lock pin to secure the latch

WARNING: Use the latch lock pin (verification pin) before hoisting any pipe.

- Start lifting

Procedure opening

WARNING: The elevator will open when pulling the handle. Ensure it is safe to open the elevator

- Remove the latch lock pin
- Pull the handle
- Move the elevator away from the pipe

Assembly and dis-assembly

Safety

NOTE: All images in this chapter are for info only. Please use the official drawings for reference

NOTE: All disassembly should be performed in a dry, dirt-free area.

CAUTION: Always wear eye protection In disassembly and assembly operations. Practice safety in all performances and use approved safety methods, materials and tools. Keep hands away from any undesignated areas.

CAUTION: Be aware of the fact that springs are being used. They may cause injury when disassembling the elevator.

WARNING: Use only genuine NOV parts when assembling the elevator

Field service

Outside of routine maintenance and inspections as outlined in API RP 8B latest revision, servicing of elevators must be limited to changing out of old non-load bearing parts with new genuine NOV parts.

Shop repairs

The elevator must be removed from service and returned to an authorized NOV repair facility when one or more of the following occurs:

- Indications found beyond the acceptable level as outlined in chapter "Non-destructive examination"
- Wear of specified parts Is beyond the acceptable level as outlined in chapter "Wear data"
- Use of non-standardized or non-genuine NOV parts.
- Unauthorized modifications or repairs.

The below listed activities must only be performed at a NOV facility or a NOV authorized repair shop:

- Welding
- Preheating above 150° C (300° F)
- Re-machining
- Replacement of primary load bearing components

Elevator disassembly guidelines

1. Remove hinge, latch and latch lock pin retainers by either splitting the lock bar with a cold chisel, drilling a hole into the expansion plug and inserting a self-tapping screw, drilling the dove pin out or by grinding in the riveted area.
2. Remove the hinge, latch and latch lock pins to separate body, door latch and latch lock.

3. Remove link blocks and / or door latch arms by driving out the pins and unscrewing bolts and nuts.
4. To assemble the elevator reverse the above procedure where applicable

Assembly SJX-elevator

Procedure

- Fit the grease nipples in the body halves (1)
- Fit the two body halves(2) together
- Insert the hinge pins (9)
- Screw in the lock screws (4). Lock the screw by placing 2 center points
- Place the ball nose spring plunger (6) including the tab washer (7) and nut (8)
- Check the functioning by opening and closing the elevator.
- Lock the tab washer (7)
- Fit the latch lock pin (3) by using the cotter pin (5)
- Check functioning of the latch lock safety (cotter) pin (5)

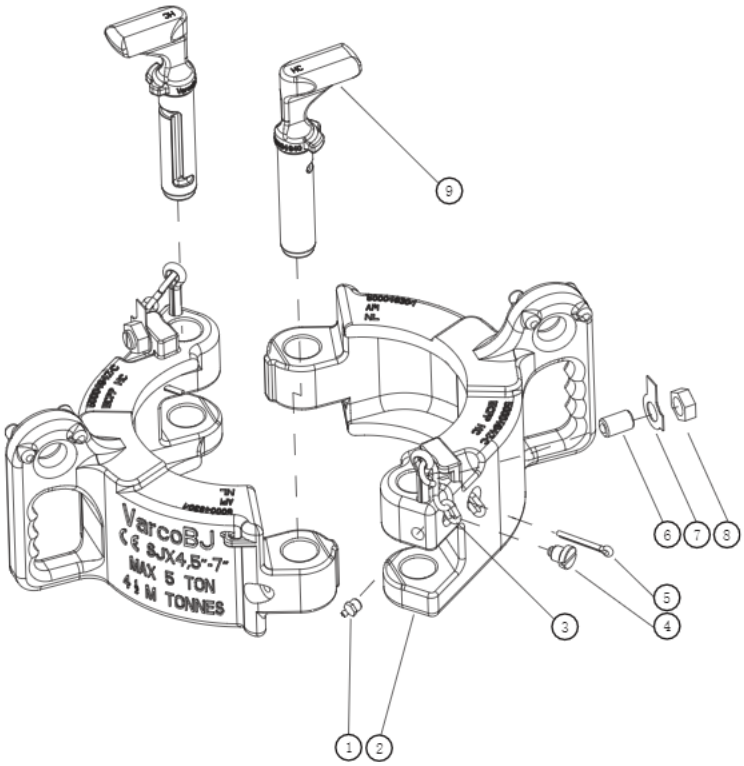

Assembly SJH-elevator

- Fit the grease nipples (7) on the latch (6)
- Insert the guidance pins (17) through back of elevator
- Fit the springs (16)
- Mount the spring release plates(15) with the bolts and washers (1,2)
- Slide the handle (3) through the back of the elevator (18)
- Lock the handle using the nut and cotter plate (4,5)
- Fit the springs from the back of the elevator (24)
- Fit the retainer bolts (20)
- Lock the retainer bolts with the washers, nuts and cotter pins (21,22,23)
- Fit the jaws with the hinge pins (19)
- Lock the jaws with the bolts, washers and cotter pins (12,13,14)
- Use the safety latch lock pin to lock the handle (8,9)

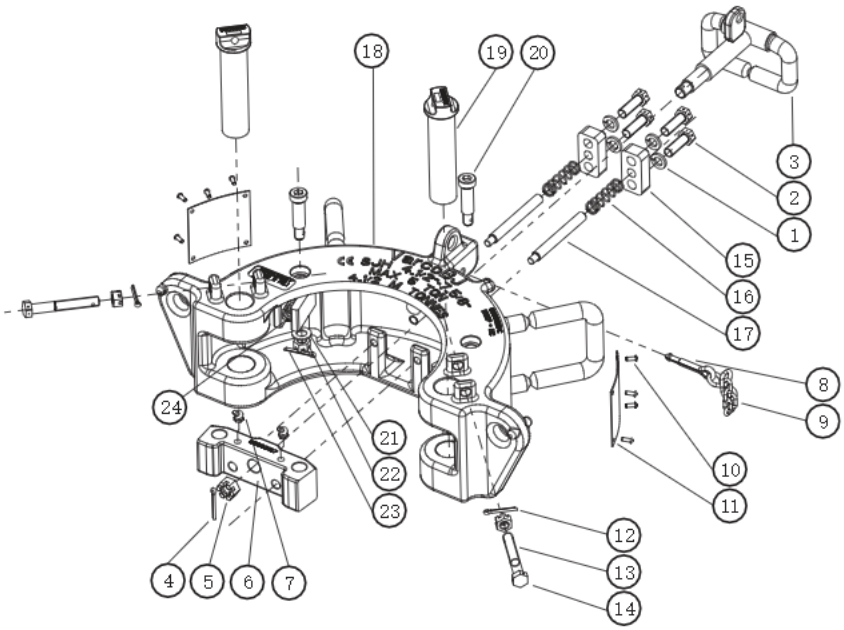

Trouble shooting

When problems cannot be solved, contact an authorized NOV repair facility.

Overview possible problems Y, G, X & A series

Problem	Possible cause	Possible solution
Elevator does not close or is difficult to close	Parts bent or damaged.	Check elevator.
	Pipe to big	Use different size elevator
Elevator does not hang level	Length of links not equal	Use same length slings
Elevator does not open	Yielding due to overload	Replace Elevator
	Elevator corroded	Open elevator by force, clean and lubricate. Check elevator for excessive wear.
Bent pins	Elevator is overloaded	Replace Elevator
Elongated holes	Elevator is overloaded	Replace Elevator
	Elevator holes worn	Check amount of wear. If within acceptance criteria use as is, when over acceptance criteria, replace Elevator

Overview possible problems SJX

Problem	Possible cause	Possible solution
Elevator does not close or is difficult to close	Removable hinge pin not locked in upper position	Pull out removable hinge pin
	Pipe to big	Use different size elevator
Elevator does not hang level	Length of slings not equal	Use same length slings
Elevator does not open	Yielding due to overload	Replace Elevator
	Elevator corroded	Open elevator by force, clean and lubricate. Check elevator for excessive wear.
Bent pins	Elevator is overloaded	Replace Elevator
Elongated holes	Elevator is overloaded	Replace Elevator
	Elevator holes worn	Check amount of wear. If within acceptance criteria use as is, when over acceptance criteria, replace Elevator. See chapter Maintenance

Overview possible problems SJH

Problem	Possible cause	Possible solution
Elevator does not close or is difficult to close	Pipe to big	Use different size elevator
Elevator does not hang level	Length of slings not equal	Use same length slings
	No balancing strap being used	Use balancing strap
Elevator does not open	Yielding due to overload	Replace Elevator
	Elevator corroded	Open elevator by force, clean and lubricate. Check elevator for excessive wear.
Bent pins	Elevator is overloaded	Replace Elevator
Elongated holes	Elevator is overloaded	Replace Elevator
	Elevator holes worn	Check amount of wear. If within acceptance criteria use as is, when over acceptance criteria, replace Elevator. See chapter Maintenance
Latch does not move	Corrosion, dirt blocking proper functioning	Disassemble, clean, lubricate and check guide pins
Jaw opening too large	Worn jaws	Check wear of jaws
Latch lock pin does not function properly	Lost spring force	Replace spring
Handle moves too easily	Handle springs lost spring force	Check springs, clean, lubricate, replace springs if required
Jaws sloppy	Hinge pins worn, bore jaws worn	Check hinge pins and bore; Repair and/of replace

Appendixes

Storage, transport & scrapping

NOTE: Ensure manual elevators are cleaned, lubricated and closed prior to any (long or short term) storage.

Storage

The main unit should be palletized for indoor storage. A cargo container would be appropriate for indoor/ outdoor storage. Every attempt should be made to avoid wide variations in temperature and high humidity. The preferred environment would be clean and dry at 60°F (16° C) ambient. If high humidity is unavoidable, 70° F (21° C) is recommended. All exposed, not painted metal surfaces, are coated with a rust preventative at the factory prior to shipment. However, these surfaces should be checked periodically (when fulfilling the above conditions once per 3 months is recommended) to be sure that no corrosion is taking place. All openings should be covered to prevent water or dust from entering. We do not recommend the use of silica or a dehydrating agent. When the elevator is not being used for a longer period then 3 days the following steps should be carried out:

- Clean elevator
- Grease elevator as described.
- Grease all blank parts.
- Use an extreme pressure, multi-purpose, lithium based grease of No. 1 or No. 2 consistency.
- Recommended rust preventative (slushing compound) for bare metal surfaces is Kendall Grade 5 (GE-D6C6A1) or equivalent.

Transport

WARNING: Only lift the elevator at it's link ear.

The best way of transporting the elevator is in its original crate (if applicable). Use oiled paper and seal the box with plastic to prevent leaking when stored outside. Secure the top safely.

Scrapping

The tool may contain grease, aluminum, rubbers, plastic, stainless steel or mild steel and several assembled components from undefined consistency or mixtures. The tool can be contaminated with mud.

WARNING: Fluids, mud and grease are unsafe when touched by the skin. Always wear gloves and safety goggles when disassembling the tool.

- Clean the tool with a steam cleaner.
- Carry of to proper place for final storage or destruction

Torque values (US) for bolts

		Bolts Lubricated with Light Machine Oil Grade 8			Bolts lubricated with Anti-seize compound Grade 8		
Dia.	**Threads per inch**	**Min. Torque (ft lb)**	**Max. Torque (ft lb)**	**Clamp force (lb)**	**Min. Torque (ft lb)**	**Max. Torque (ft lb)**	**Clamp force (lb)**
Coarse Thread Series, UNC							
1/4"	20	11.4	12.6	2860	8.6	9.5	2860
5/16"	18	24	26	3720	17.8	19.7	3720
3/8"	16	43	47	7000	32	35	7000
7/16"	14	67	74	9550	50	55	9550
1/2"	13	105	116	12750	78	87	12750
9/16"	12	143	158	16100	107	118	16100
5/8"	11	209	231	20350	157	173	20350
3/4"	10	361	399	30100	271	299	30100
7/8"	9	570	630	41600	428	473	41600
1"	8	855	945	54500	641	709	54400
1 1/8"	7	1216	1344	68700	912	1008	68700
1 1/4"	7	1729	1911	87200	1297	1433	87200
1 3/8"	6	2261	2499	104000	1696	1874	104000
1 1/2"	6	3002	3318	126500	2252	2489	126500

Tensile Strength = 150,000 psi to 1" dia. Proof Strength = 120,000 psi

		Bolts Lubricated with Light Machine Oil Grade 8			Bolts lubricated with Anti-seize compound Grade 8		
Dia.	**Threads per inch**	**Min. Torque (ft lb)**	**Max. Torque (ft lb)**	**Clamp force (lb)**	**Min. Torque (ft lb)**	**Max. Torque (ft lb)**	**Clamp force (lb)**
Fine Thread Series, UNF							
1/4"	28	13.3	14.7	3280	10	11	3280
5/16"	24	24	26	5220	17.8	19.7	5220
3/8"	24	48	53	7900	36	39	7900
7/16"	20	76	84	10700	57	63	10700
1/2"	20	114	126	14400	86	95	14400
9/16"	18	162	179	18250	121	134	18250
5/8"	18	228	252	23000	171	189	23000
3/4"	16	399	441	33600	299	331	33600
7/8"	14	627	693	45800	470	520	45800
1"	14	950	1050	59700	713	788	59700
1 1/8"	12	1368	1512	77000	1026	1134	77000
1 1/4"	12	1900	2100	96600	1425	1565	96600
1 3/8"	12	2584	2856	118400	1938	2142	118400
1 1/2"	12	3382	3738	142200	2537	2804	142200

Tensile Strength = 150,000 psi to 1" dia. Proof Strength = 120,000 psi

Torque values (metric) for bolts

		Bolts Lubricated with Light Machine Oil Grade 8			Bolts lubricated with Anti-seize compound Grade 8		
Dia meter	**Threads per inch**	**Min. Torque (Nm)**	**Max. Torque (Nm)**	**Clamp force (N)**	**Min. Torque (Nm)**	**Max. Torque (Nm)**	**Clamp force (N)**
Coarse Thread Series, UNC							
1/4"	20	15.5	17.1	12870	11.7	12.9	12870
5/16"	18	32.6	35.4	16740	24.2	26.8	16740
3/8"	16	58.5	64	32500	43.5	47.6	31500
7/16"	14	91.1	100.6	42980	68	92.5	42980
1/2"	13	143	158	57380	106	118	57380
9/16"	12	195	215	72450	145.5	160	72450
5/8"	11	284	314	91580	213.5	235	91580
3/4"	10	491	542	135450	368	407	135450
7/8"	9	775	857	187200	582	643	187200
1"	8	1163	1285	245250	872	965	245250
1 1/8"	7	1654	1828	309150	1240	1370	309150
1 1/4"	7	2351	2598	382400	1764	1949	392400
1 3/8"	6	3075	3398	468000	2306	2549	468000
1 1/2"	6	4082	4512	569250	3062	3385	569250

		Bolts Lubricated with Light Machine Oil Grade 8			Bolts lubricated with Anti-seize compound Grade 8		
Dia meter	**Threads per inch**	**Min. Torque (Nm)**	**Max. Torque (Nm)**	**Clamp force (N)**	**Min. Torque (Nm)**	**Max. Torque (Nm)**	**Clamp force (N)**
Fine Thread Series, UNF							
1/4"	28	18.1	20	14760	13.6	15	14760
5/16"	24	32.6	35	23490	24.2	26.8	23490
3/8"	24	65.3	72	35550	49	53	35550
7/16"	20	103	114	48150	77.5	86	48150
1/2"	20	155	171	64800	117	129	64800
9/16"	18	220	239	82130	165	182	82130
5/8"	18	310	343	103500	232	257	103500
3/4"	16	542	600	151200	406	450	151200
7/8"	14	853	943	206100	639	707	206100
1"	14	1292	1428	268650	970	1071	268650
1 1/8"	12	1860	2056	346500	1396	1542	346500
1 1/4"	12	2584	2856	434700	1938	2128	434700
1 3/8"	12	3514	3884	532800	2635	2913	532800
1 1/2"	12	4599	5083	639900	3450	3813	639900

Spare parts SMX

Recommended spare parts (pn 50006430-12) SMX ELEVATOR 3.1/2" - 5.3/4" 150 TON

Component Part	Part Description	Qty
50006421	lock bar,hinge pin smx-el	1
53201	fitting,grease,straight	4
50006437	smx camlatch and lock pin	2
50006408	smx verification lock machined	1
50510-C	nut, hex-slotted (unc-2b)	5
51402-12	pin, cotter	5
939099-65	hexagon head cap screw, class 2a	4
979770-2820	28x32-20mm bushing	4
979770-2825	28x32-25mm bushing	3
59000333	compression spring d-275-a (rvs)	2
59000334	compression spring d-268-b	1
50810-N-C	washer, flat	1
50007-12-C8D	screw, cap-hex hd (unc-2a)	5
51007-C	washer, lock-heavy	5
50006423	camlatch stop pin	1
50006425	lock stop block	1

Recommended spare parts (pn 50006400-12) SMX Elevator 6" - 9" 150 TON

Component Part	Part Description	Qty
50006421	lock bar,hinge pin smx-el	1
53201	fitting,grease,straight	4
50006407	smx camlatch and lock pin	2
50006408	smx verification lock machined	1
50510-C	nut, hex-slotted (unc-2b)	5
51402-12	pin, cotter	5
939099-65	hexagon head cap screw, class 2a	4
979770-2820	28x32-20mm bushing	4
979770-2825	28x32-25mm bushing	3
59000333	compression spring d-275-a (rvs)	2
59000334	compression spring d-268-b	1
50810-N-C	washer, flat	1
979785-20	tabwasher with long tab and wing	1
50006423	camlatch stop pin	1
50006425	lock stop block	1
50007-12-C8D	screw, cap-hex hd (unc-2a)	5
51007-C	washer, lock-heavy	5
939099-536	hexagon head cap screw, class 2a	1
50512-C	nut, hex-slotted (unc-2b)	1

Recommended spare parts (pn 50006426-12) SMX Elevator 6" - 9" 250 TON

Component Part	Part Description	Qty
50006444	lock bar 1/4x3/8" l=2-1/2"	1
53201	fitting,grease,straight	4
50006407	smx camlatch and lock pin	2
50006408	smx verification lock machined	1
50510-C	nut, hex-slotted (unc-2b)	1

50512-C	nut, hex-slotted (unc-2b)	4
51402-12	pin, cotter	5
939099-96	hexagon head cap screw, class 2a	4
979770-56	40x44-50mm slide pin bushing	4
59000333	compression spring d-275-a (rvs)	2
59000334	compression spring d-268-b	1
50810-N-C	washer, flat	1
50007-12-C8D	screw, cap-hex hd (unc-2a)	5
51007-C	washer, lock-heavy	5
50006445	camlatch stop pin	1
50006425	lock stop block	1

Recommended spare parts (pn 50006455-12) SMX Elevator 9.1/8" - 13.3/8" 150 TON

Component Part	Part Description	Qty
53201	fitting,grease,straight	4
50006408	smx verification lock machined	1
50510-C	nut, hex-slotted (unc-2b)	5
51402-12	pin, cotter	5
939099-65	hexagon head cap screw, class 2a	4
59000333	compression spring d-275-a (rvs)	2
59000334	compression spring d-268-b	1
50810-N-C	washer, flat	1
50007-12-C8D	screw, cap-hex hd (unc-2a)	5
51007-C	washer, lock-heavy	5
50006425	lock stop block	1
979770-56	40x44-50mm slide pin bushing	4
50006437	smx camlatch and lock pin	2
50006444	lock bar 1/4x3/8" l=2-1/2"	1
50006445	camlatch stop pin	1

Recommended spare parts (pn 50006440-12) SMX Elevator 9.1/8" - 13.3/8" 250 & 350 TON

Component Part	Part Description	Qty
50006444	lock bar 1/4x3/8" l=2-1/2"	1
53201	fitting,grease,straight	4
50006407	smx camlatch and lock pin	2
50006408	smx verification lock machined	1
50510-C	nut, hex-slotted (unc-2b)	1
50512-C	nut, hex-slotted (unc-2b)	4
51402-12	pin, cotter	5
939099-96	hexagon head cap screw, class 2a	4
979770-56	40x44-50mm slide pin bushing	4
59000333	compression spring d-275-a (rvs)	2
59000334	compression spring d-268-b	1
50810-N-C	washer, flat	1
50007-12-C8D	screw, cap-hex hd (unc-2a)	5
51007-C	washer, lock-heavy	5
50006445	camlatch stop pin	1
50006425	lock stop block	1

Recommended spare parts (pn 50006450-12) SMX Elevator 13.1/2" - 17.7/8" 250 TON

Component Part	Part Description	Qty per Assembly
50006444	lock bar 1/4x3/8" l=2-1/2"	1
53201	fitting,grease,straight	4
50006407	smx camlatch and lock pin	2
50006408	smx verification lock machined	1
50510-C	nut, hex-slotted (unc-2b)	1
50512-C	nut, hex-slotted (unc-2b)	4
51402-12	pin, cotter	5
939099-96	hexagon head cap screw, class 2a	4
979770-56	40x44-50mm slide pin bushing	4
59000333	compression spring d-275-a (rvs)	2
59000334	compression spring d-268-b	1
50810-N-C	washer, flat	1
50007-12-C8D	screw, cap-hex hd (unc-2a)	5
51007-C	washer, lock-heavy	5
50006445	camlatch stop pin	1
50006425	lock stop block	1

Recommended spare parts (pn 50006460-12) SMX Elevator 18" - 24.1/2" 250 TON

Component Part	Part Description	Qty
50006444	lock bar 1/4x3/8" l=2-1/2"	1
53201	fitting,grease,straight	4
50006437	smx camlatch and lock pin	2
50006408	smx verification lock machined	1
50510-C	nut, hex-slotted (unc-2b)	1
50512-C	nut, hex-slotted (unc-2b)	4
51402-12	pin, cotter	5
939099-96	hexagon head cap screw, class 2a	4
979770-56	40x44-50mm slide pin bushing	4
59000333	compression spring d-275-a (rvs)	2
59000334	compression spring d-268-b	1
50810-N-C	washer, flat	1
50007-12-C8D	screw, cap-hex hd (unc-2a)	5
51007-C	washer, lock-heavy	5
50006465	camlatch stop pin	1
50006425	lock stop block	1

Critical Area & Wear Data Drawings

Critical area drawings

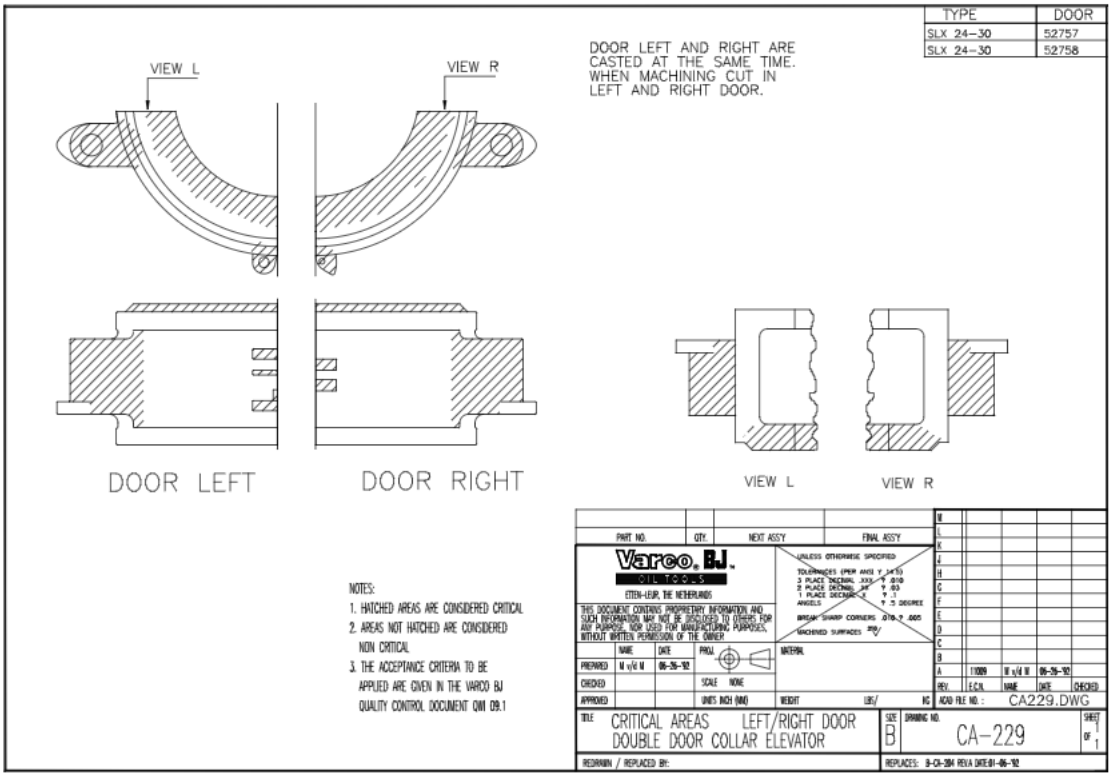

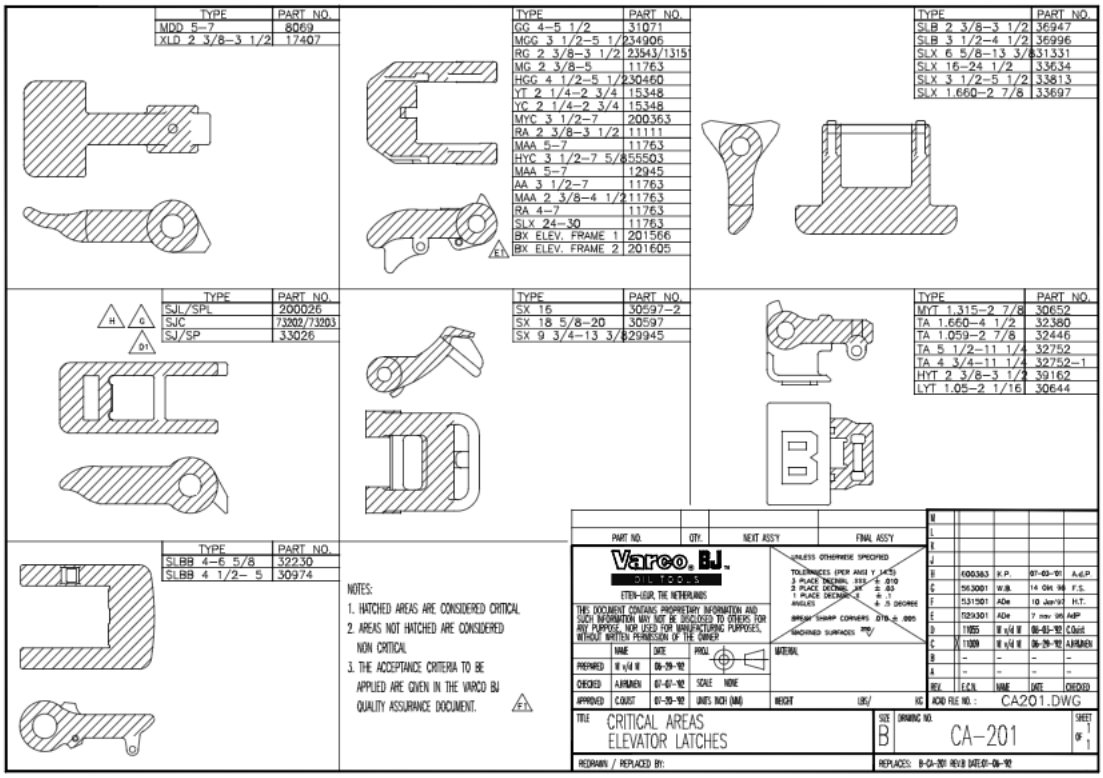

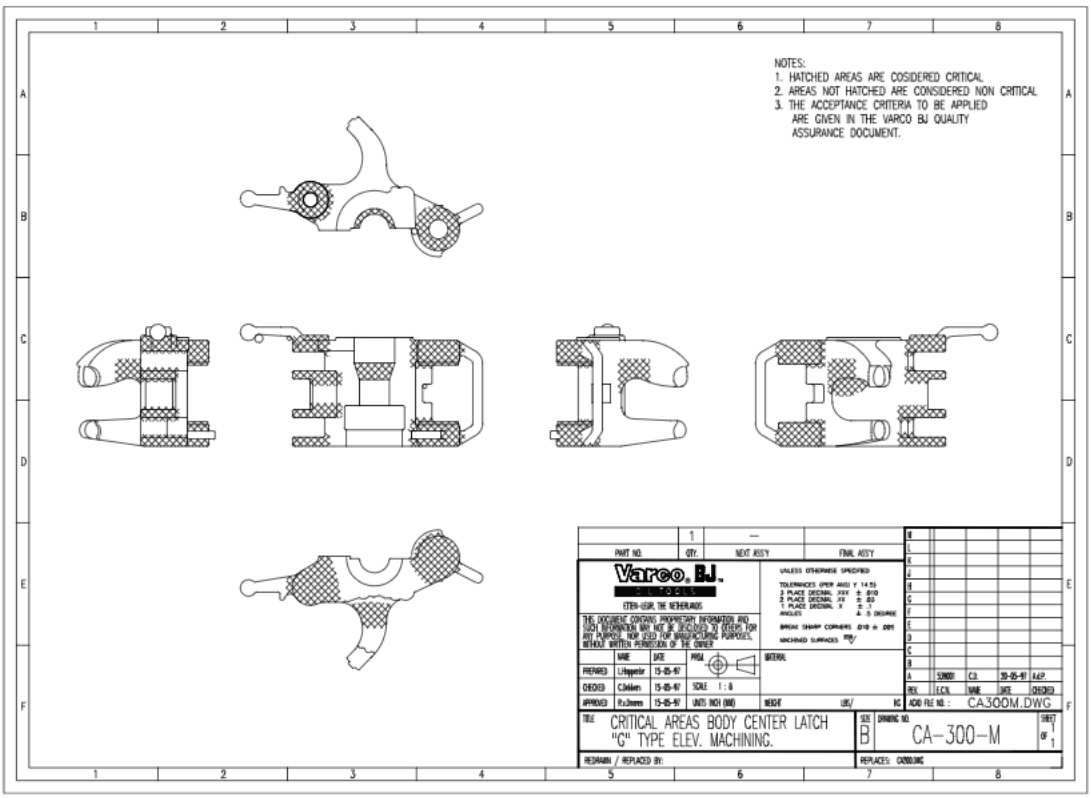
NOTES:
1. HATCHED AREAS ARE COSIDERED CRITICAL.
2. AREAS NOT HATCHED ARE CONSIDERED NON CRITICAL.
3. THE ACCEPTANCE CRITERIA TO BE APPLIED ARE GIVEN IN THE VARCO BJ QUALITY ASSURANCE DOCUMENT.
Varco BJ
OIL TOOLS
EITEN-LEUR, THE NETHERLANDS
CRITICAL AREAS BODY CENTER LATCH "G" TYPE ELEV. MACHINING.
CA-300-M
CA300M.DWG

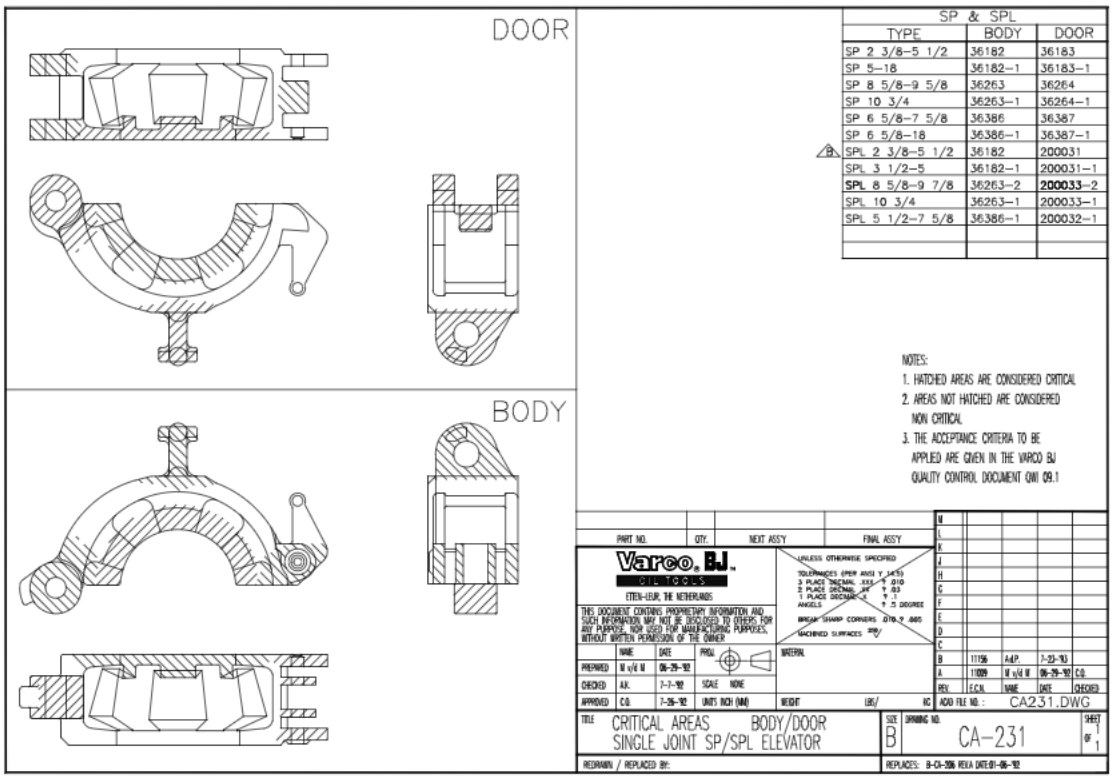
DOOR
BODY
SP & SPL
TYPE | BODY | DOOR
SP 2 3/8-5 1/2 | 36182 | 36183
SP 5-18 | 36182-1 | 36183-1
SP 8 5/8-9 5/8 | 36263 | 36264
SP 10 3/4 | 36263-1 | 36264-1
SP 6 5/8-7 5/8 | 36386 | 36387
SP 6 5/8-18 | 36386-1 | 36387-1
SPL 2 3/8-5 1/2 | 36182 | 200031
SPL 3 1/2-5 | 36182-1 | 200031-1
SPL 8 5/8-9 7/8 | 36263-2 | 200033-2
SPL 10 3/4 | 36263-1 | 200033-1
SPL 5 1/2-7 5/8 | 36386-1 | 200032-1
NOTES:
1. HATCHED AREAS ARE CONSIDERED CRITICAL
2. AREAS NOT HATCHED ARE CONSIDERED NON CRITICAL
3. THE ACCEPTANCE CRITERIA TO BE APPLIED ARE GIVEN IN THE VARCO BJ QUALITY CONTROL DOCUMENT QWI 09.1
Varco BJ
OIL TOOLS
EITEN-LEUR, THE NETHERLANDS
CRITICAL AREAS BODY/DOOR SINGLE JOINT SP/SPL ELEVATOR
CA-231
CA231.DWG

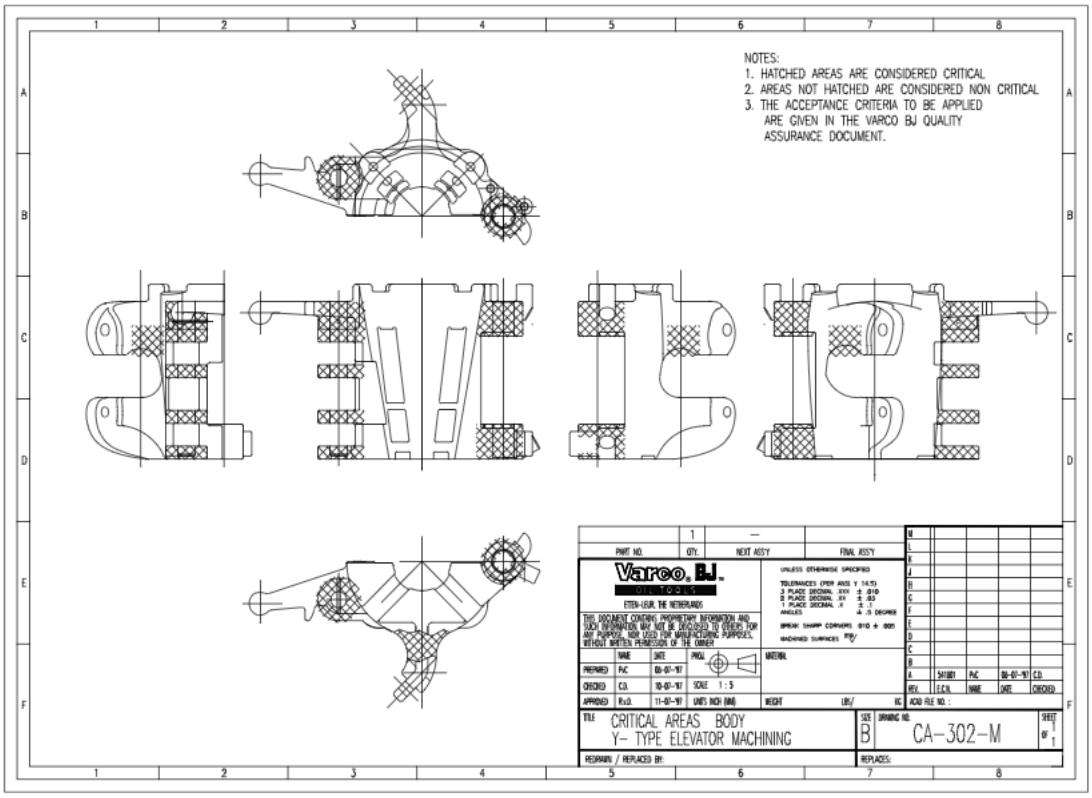
NOTES:
1. HATCHED AREAS ARE CONSIDERED CRITICAL
2. AREAS NOT HATCHED ARE CONSIDERED NON CRITICAL
3. THE ACCEPTANCE CRITERIA TO BE APPLIED ARE GIVEN IN THE VARCO BJ QUALITY ASSURANCE DOCUMENT.
Varco BJ
ETEN-LEUR, THE NETHERLANDS
CRITICAL AREAS BODY
Y- TYPE ELEVATOR MACHINING
CA-302-M

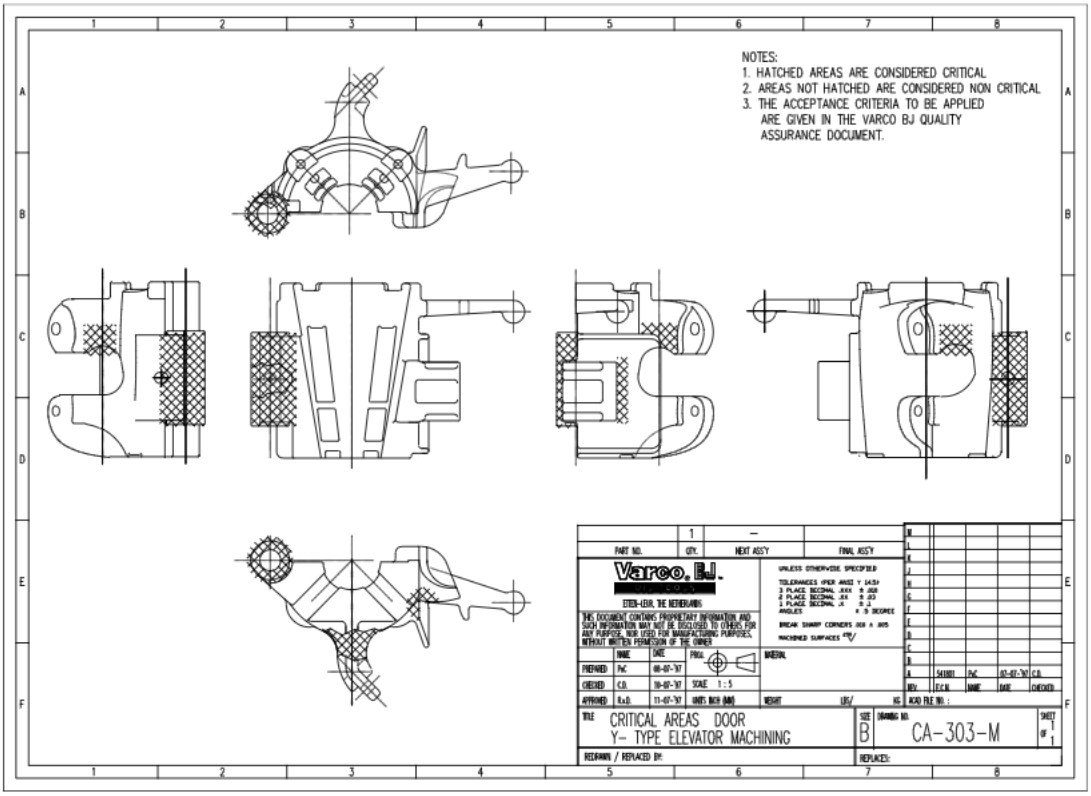
NOTES:
1. HATCHED AREAS ARE CONSIDERED CRITICAL
2. AREAS NOT HATCHED ARE CONSIDERED NON CRITICAL
3. THE ACCEPTANCE CRITERIA TO BE APPLIED ARE GIVEN IN THE VARCO BJ QUALITY ASSURANCE DOCUMENT.
Varco BJ
ETEN-LEUR, THE NETHERLANDS
CRITICAL AREAS DOOR
Y- TYPE ELEVATOR MACHINING
CA-303-M

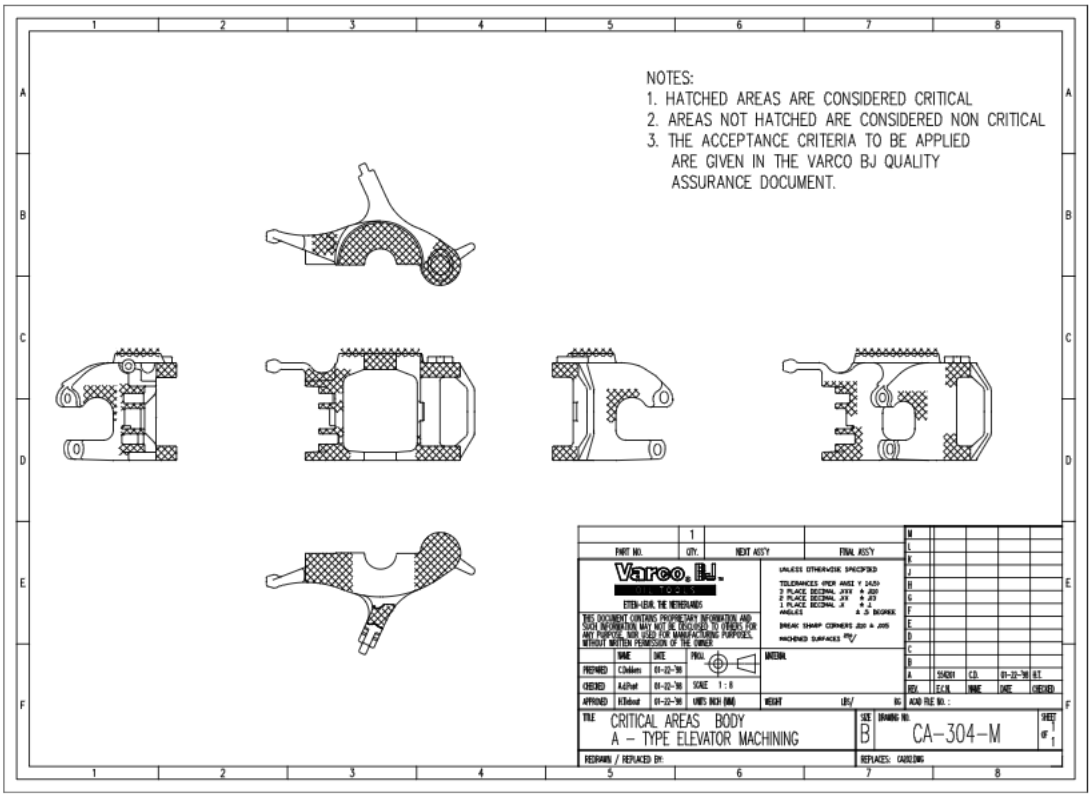
NOTES:
1. HATCHED AREAS ARE CONSIDERED CRITICAL
2. AREAS NOT HATCHED ARE CONSIDERED NON CRITICAL
3. THE ACCEPTANCE CRITERIA TO BE APPLIED ARE GIVEN IN THE VARCO BJ QUALITY ASSURANCE DOCUMENT.
Varco B.J.
ETEN-LEUR, THE NETHERLANDS
CRITICAL AREAS BODY
A – TYPE ELEVATOR MACHINING
CA-304-M

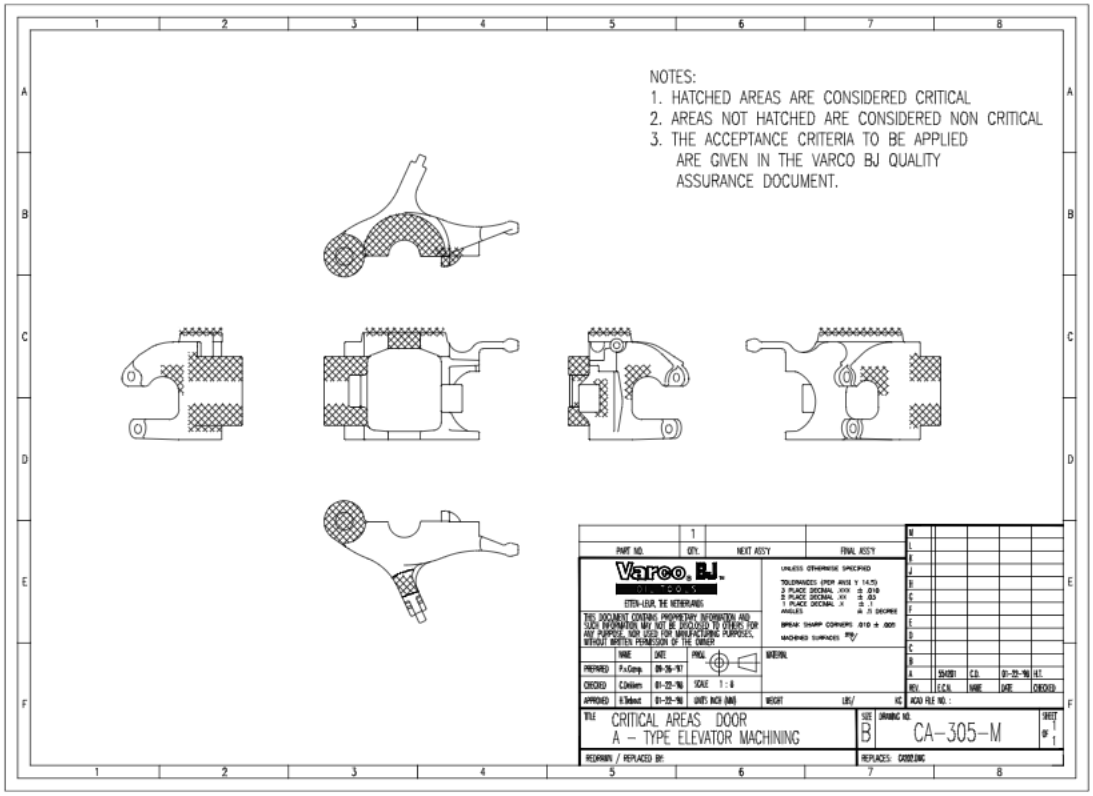
NOTES:
1. HATCHED AREAS ARE CONSIDERED CRITICAL
2. AREAS NOT HATCHED ARE CONSIDERED NON CRITICAL
3. THE ACCEPTANCE CRITERIA TO BE APPLIED ARE GIVEN IN THE VARCO BJ QUALITY ASSURANCE DOCUMENT.
Varco B.J.
ETEN-LEUR, THE NETHERLANDS
CRITICAL AREAS DOOR
A – TYPE ELEVATOR MACHINING
CA-305-M

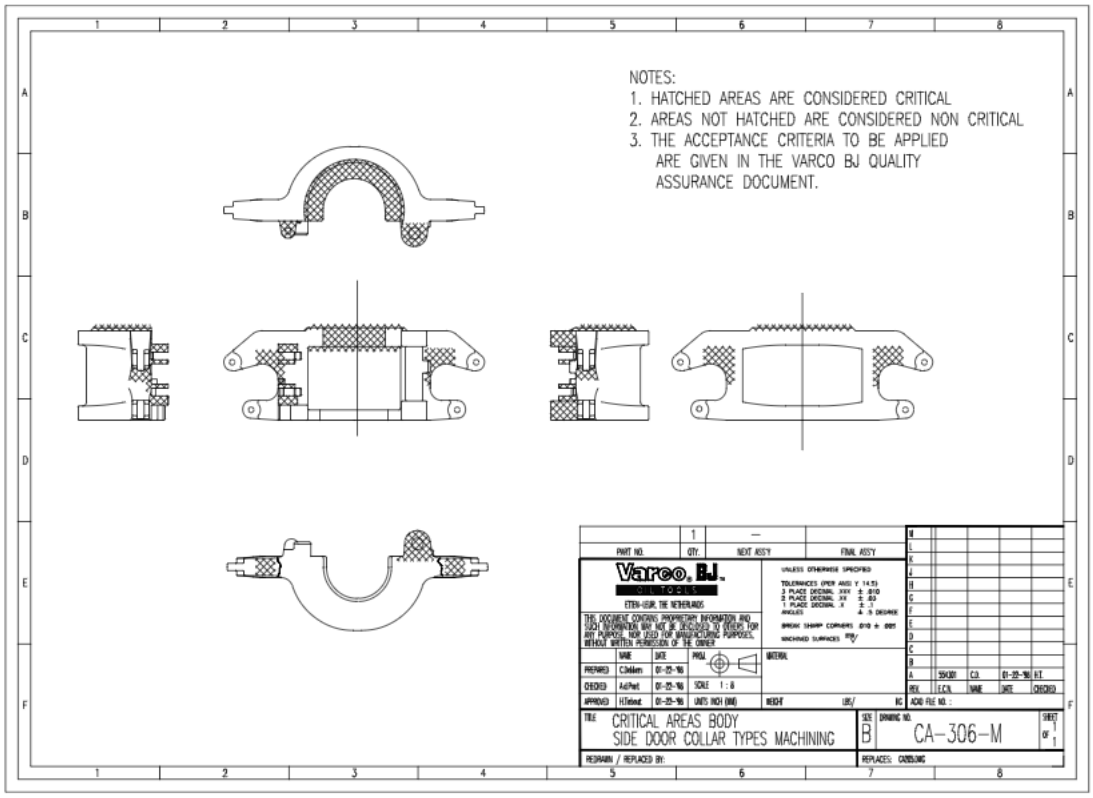
NOTES:
1. HATCHED AREAS ARE CONSIDERED CRITICAL
2. AREAS NOT HATCHED ARE CONSIDERED NON CRITICAL
3. THE ACCEPTANCE CRITERIA TO BE APPLIED ARE GIVEN IN THE VARCO BJ QUALITY ASSURANCE DOCUMENT.
Varco BJ
OILTOOLS
ETTEN-LEUR, THE NETHERLANDS
CRITICAL AREAS BODY
SIDE DOOR COLLAR TYPES MACHINING
CA-306-M

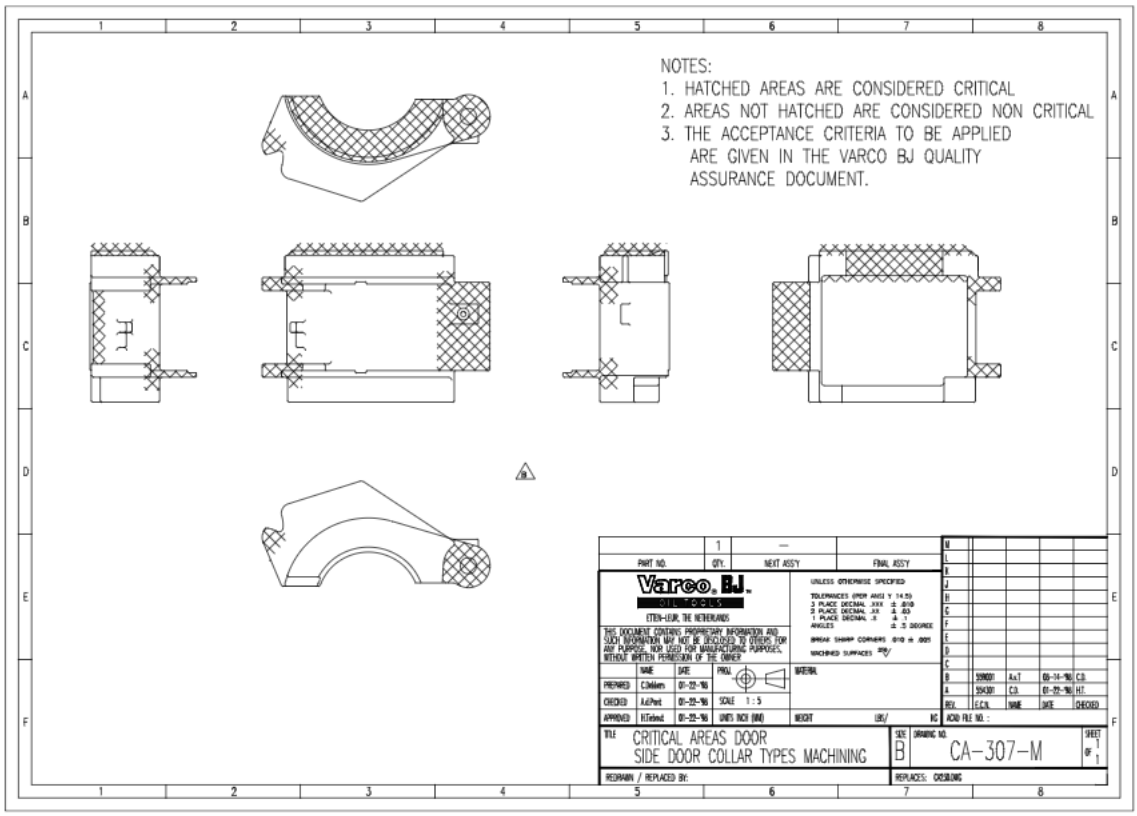
NOTES:
1. HATCHED AREAS ARE CONSIDERED CRITICAL
2. AREAS NOT HATCHED ARE CONSIDERED NON CRITICAL
3. THE ACCEPTANCE CRITERIA TO BE APPLIED ARE GIVEN IN THE VARCO BJ QUALITY ASSURANCE DOCUMENT.
Varco BJ
OILTOOLS
ETTEN-LEUR, THE NETHERLANDS
CRITICAL AREAS DOOR
SIDE DOOR COLLAR TYPES MACHINING
CA-307-M

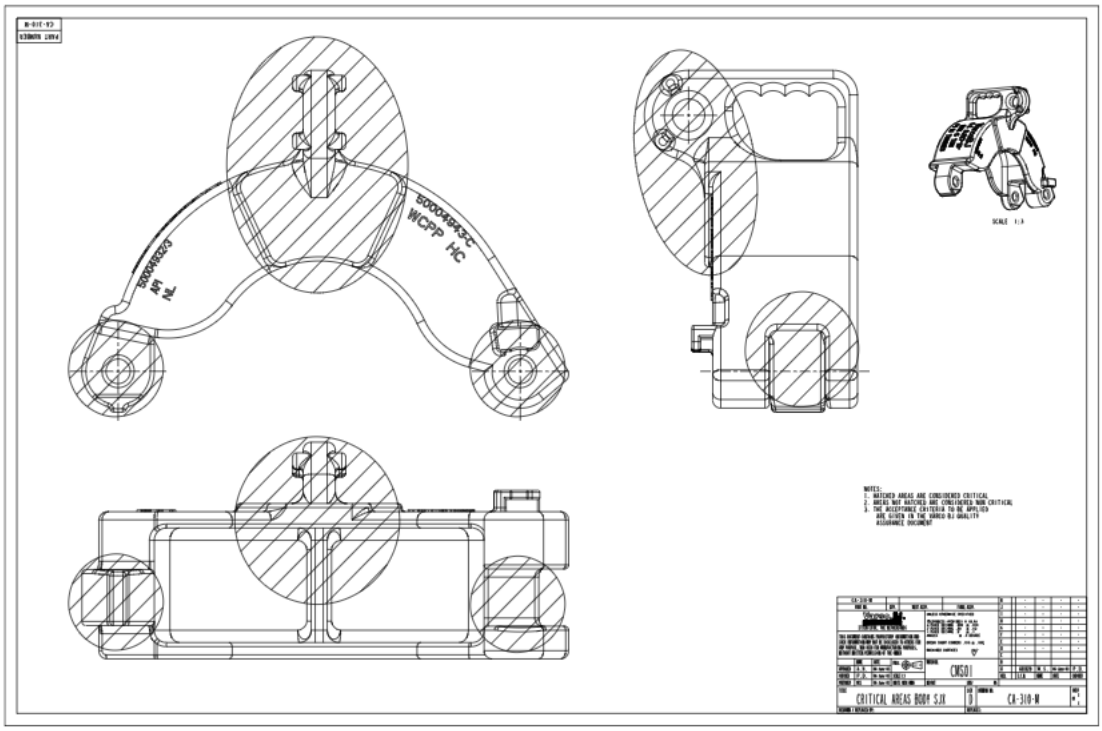
CRITICAL AREAS BODY SJX
CA-310-M
CMS01

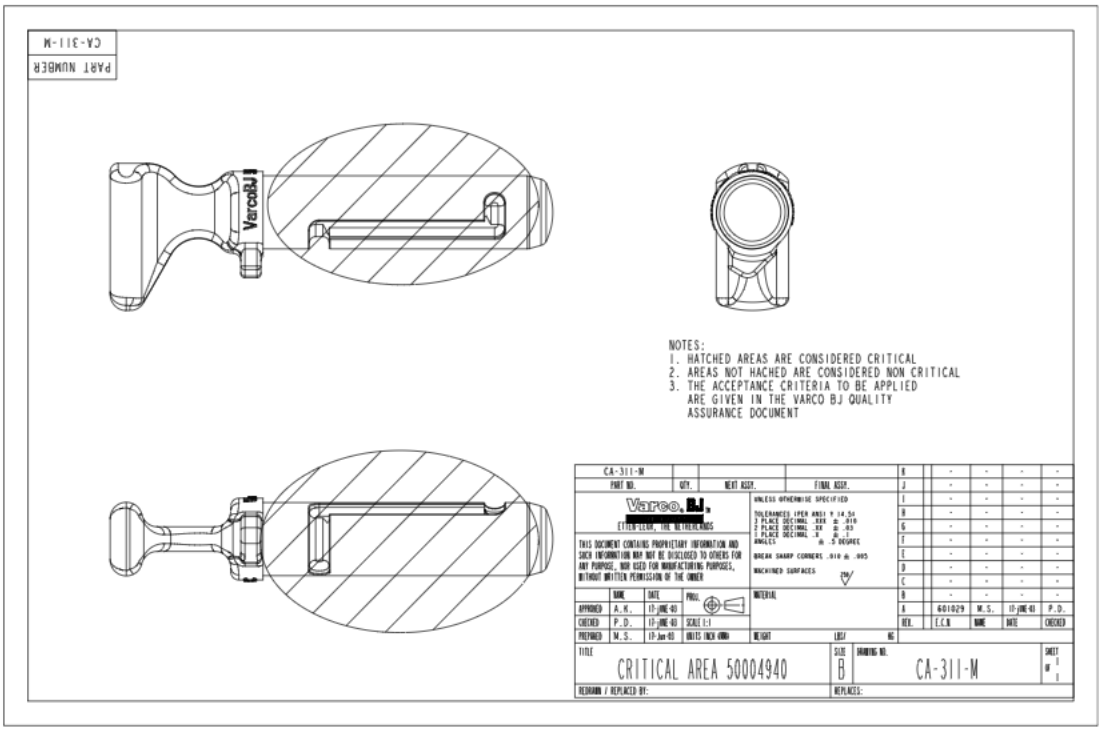
PART NUMBER
CA-311-M
NOTES:
1. HATCHED AREAS ARE CONSIDERED CRITICAL
2. AREAS NOT HACHED ARE CONSIDERED NON CRITICAL
3. THE ACCEPTANCE CRITERIA TO BE APPLIED
ARE GIVEN IN THE VARCO BJ QUALITY
ASSURANCE DOCUMENT
CRITICAL AREA 50004940
CA-311-M

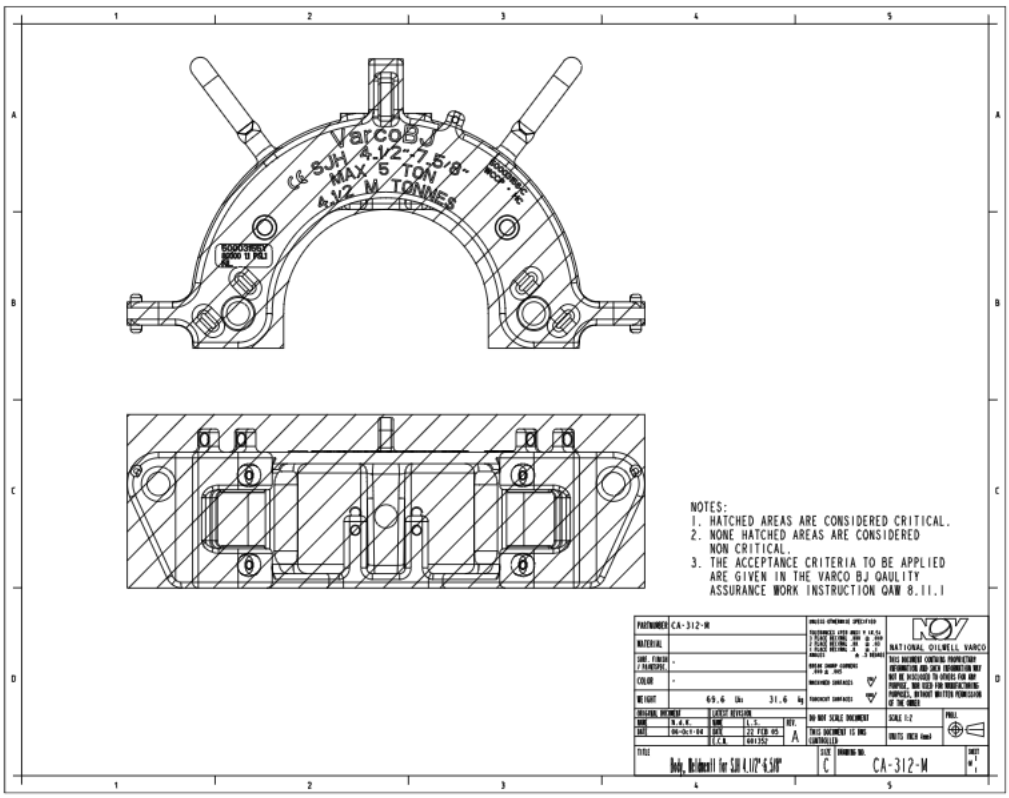
VarcoBJ
SJH 4.1/2-7.5/8-
MAX 5 TON
4.1/2 M TONNES
NOTES:
1. HATCHED AREAS ARE CONSIDERED CRITICAL.
2. NONE HATCHED AREAS ARE CONSIDERED NON CRITICAL.
3. THE ACCEPTANCE CRITERIA TO BE APPLIED ARE GIVEN IN THE VARCO BJ QAULITY ASSURANCE WORK INSTRUCTION QAW 8.11.1
PARTNUMBER CA-312-M
MATERIAL
COLOR
WEIGHT 69.6 lbs 31.6 kg
NATIONAL OILWELL VARCO
SCALE 1:2
UNITS INCH (mm)
Body, Weldment for SJH 4.1/2" 4.5/8"
C
CA-312-M

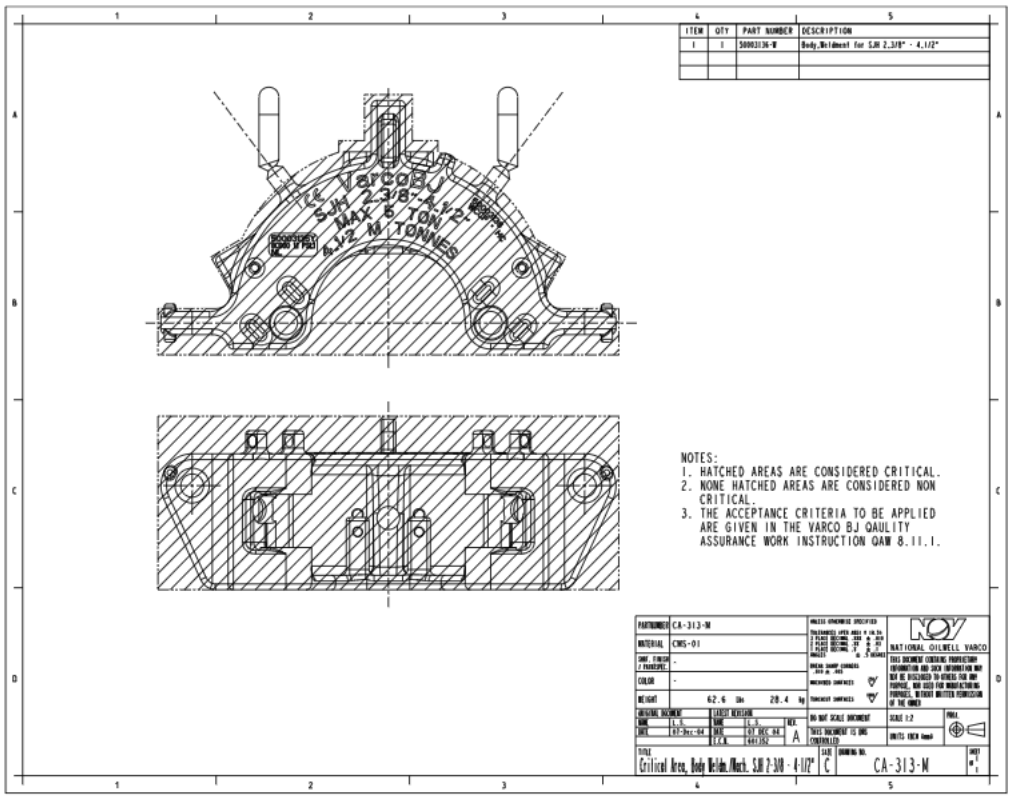
ITEM QTY PART NUMBER DESCRIPTION
1 1 50003136-M Body,Weldment for SJH 2.3/8" - 4.1/2"
VarcoBJ
SJH 2.3/8-4.1/2-
MAX 5 TON
4.1/2 M TONNES
NOTES:
1. HATCHED AREAS ARE CONSIDERED CRITICAL.
2. NONE HATCHED AREAS ARE CONSIDERED NON CRITICAL.
3. THE ACCEPTANCE CRITERIA TO BE APPLIED ARE GIVEN IN THE VARCO BJ QAULITY ASSURANCE WORK INSTRUCTION QAW 8.11.1.
PARTNUMBER CA-313-M
MATERIAL CMS-01
COLOR
WEIGHT 62.6 lbs 28.4 kg
NATIONAL OILWELL VARCO
SCALE 1:2
UNITS INCH (mm)
Critical Area, Body Weldm./Mach. SJH 2-3/8 - 4-1/2"
C
CA-313-M

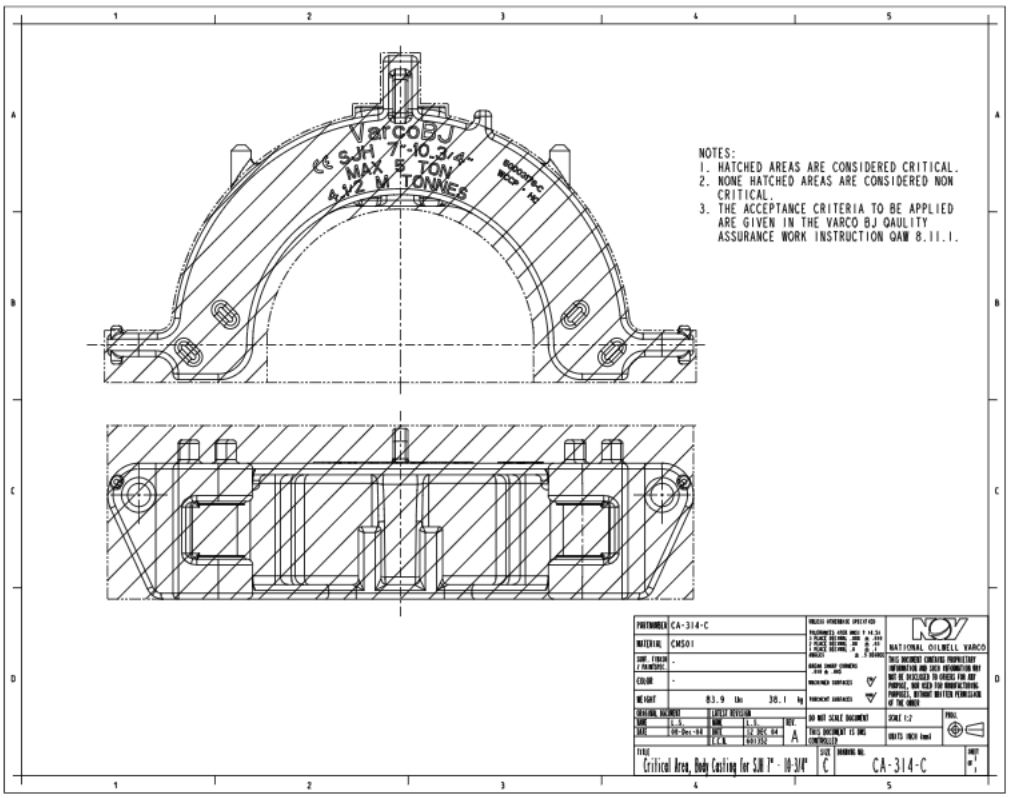
VarcoBJ
SJH 7-10.3/4
MAX 8 TON
4.1/2 M TONNES
NOTES:
1. HATCHED AREAS ARE CONSIDERED CRITICAL.
2. NONE HATCHED AREAS ARE CONSIDERED NON CRITICAL.
3. THE ACCEPTANCE CRITERIA TO BE APPLIED ARE GIVEN IN THE VARCO BJ QAULITY ASSURANCE WORK INSTRUCTION QAW 8.11.1.
PARTNUMBER CA-314-C
MATERIAL CMS01
COLOR -
WEIGHT 83.9 lbs 38.1 kg
NATIONAL OILWELL VARCO
DO NOT SCALE DOCUMENT
THIS DOCUMENT IS UNCONTROLLED
SCALE 1:2
UNITS INCH (mm)
TITLE Critical Area, Body Casting for SJH 7" - 10-3/4"
SIZE C
DRAWING NO. CA-314-C
SHEET #1

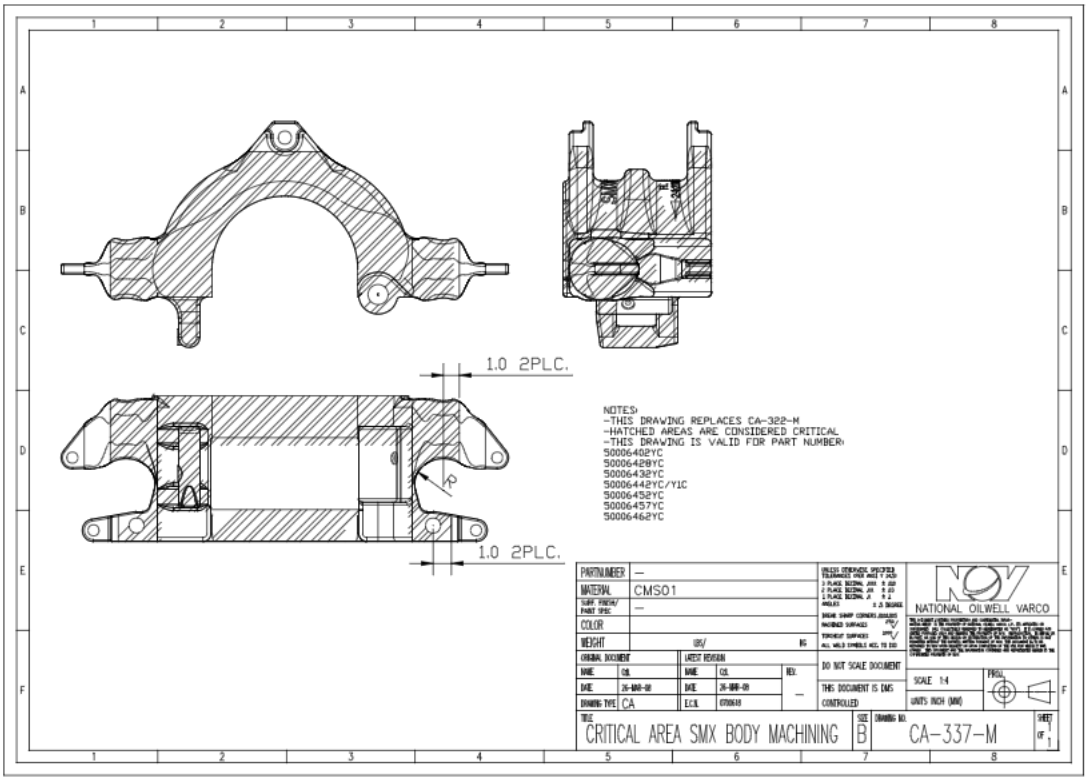
1.0 2PLC.
1.0 2PLC.
NOTES:
-THIS DRAWING REPLACES CA-322-M
-HATCHED AREAS ARE CONSIDERED CRITICAL
-THIS DRAWING IS VALID FOR PART NUMBER:
50006402YC
50006420YC
50006432YC
50006442YC/Y1C
50006452YC
50006457YC
50006462YC
PARTNUMBER —
MATERIAL CMS01
COLOR
WEIGHT LBS/ KG
NATIONAL OILWELL VARCO
DO NOT SCALE DOCUMENT
THIS DOCUMENT IS UNCONTROLLED
SCALE 1:4
UNITS INCH (MM)
TITLE CRITICAL AREA SMX BODY MACHINING
SIZE B
DRAWING NO. CA-337-M
SHEET 1 OF 1

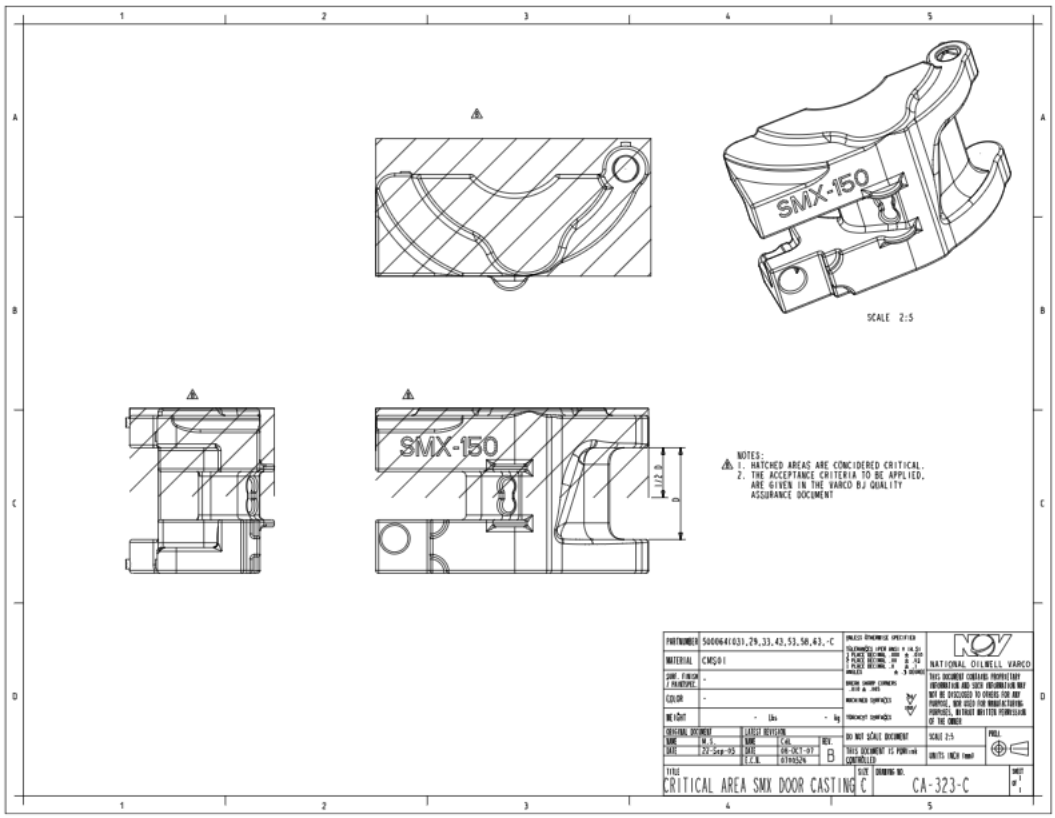
SMX-150
SCALE 2:5
NOTES:
1. HATCHED AREAS ARE CONSIDERED CRITICAL.
2. THE ACCEPTANCE CRITERIA TO BE APPLIED, ARE GIVEN IN THE VARCO BJ QUALITY ASSURANCE DOCUMENT
PARTNUMBER 50006410 31,29,33,43,53,58,63,-C
MATERIAL CMS01
COLOR -
WEIGHT - lbs - kg
NATIONAL OILWELL VARCO
THIS DOCUMENT CONTAINS PROPRIETARY INFORMATION AND SUCH INFORMATION MAY NOT BE DISCLOSED TO OTHERS FOR ANY PURPOSE, NOR USED FOR MANUFACTURING PURPOSES, WITHOUT WRITTEN PERMISSION OF THE OWNER
ORIGINAL DOCUMENT
LATEST REVISION
DO NOT SCALE DOCUMENT
SCALE 2:5
UNITS INCH (mm)
TITLE
CRITICAL AREA SMX DOOR CASTING
SIZE C
DRAWING NO. CA-323-C

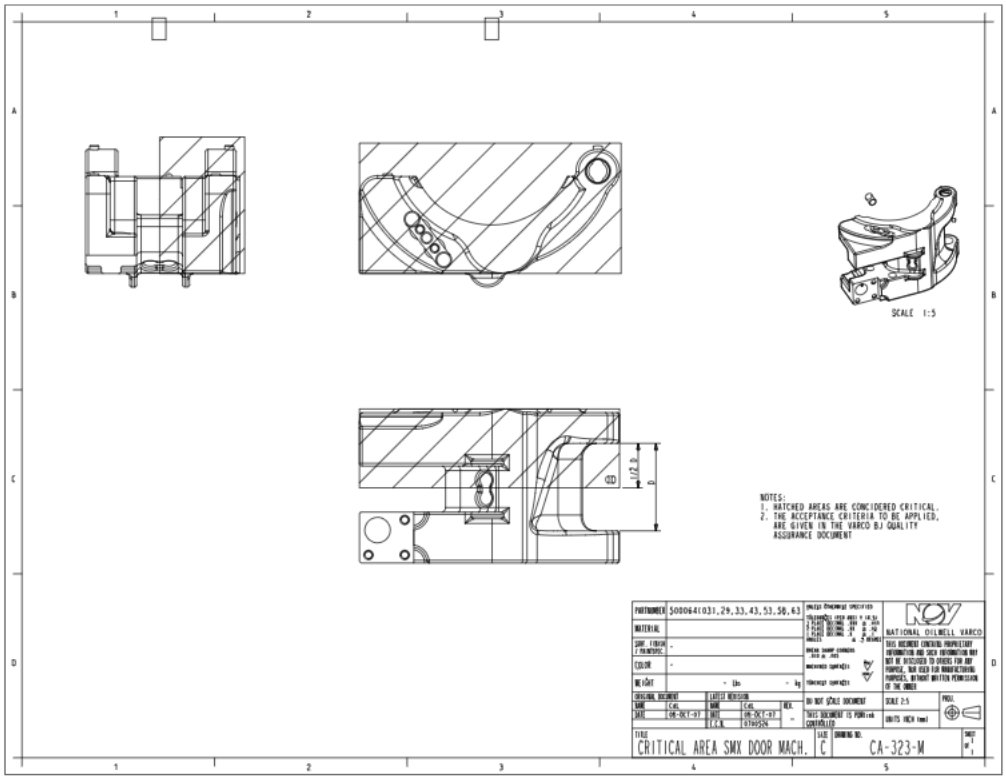
SCALE 1:5
NOTES:
1. HATCHED AREAS ARE CONSIDERED CRITICAL.
2. THE ACCEPTANCE CRITERIA TO BE APPLIED, ARE GIVEN IN THE VARCO BJ QUALITY ASSURANCE DOCUMENT
PARTNUMBER 50006410 31,29,33,43,53,58,63
NATIONAL OILWELL VARCO
ORIGINAL DOCUMENT
LATEST REVISION
DO NOT SCALE DOCUMENT
SCALE 2:5
UNITS INCH (mm)
TITLE
CRITICAL AREA SMX DOOR MACH.
SIZE C
DRAWING NO. CA-323-M

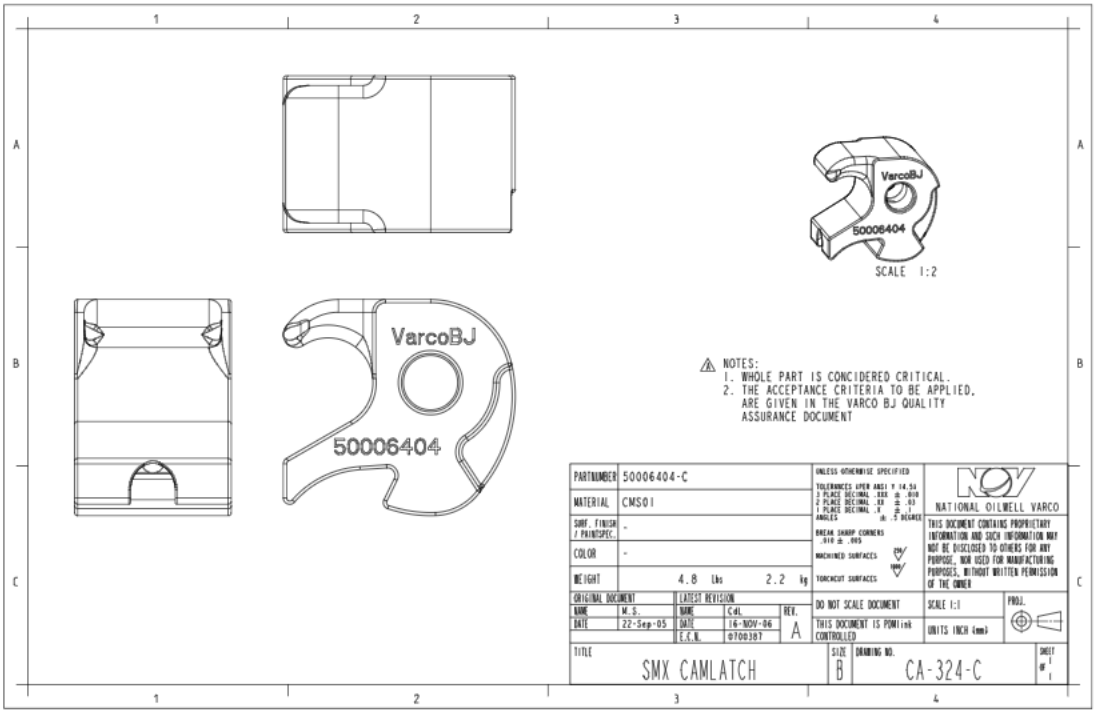
VarcoBJ
50006404
SCALE 1:2
NOTES:
1. WHOLE PART IS CONCIDERED CRITICAL.
2. THE ACCEPTANCE CRITERIA TO BE APPLIED, ARE GIVEN IN THE VARCO BJ QUALITY ASSURANCE DOCUMENT
PARTNUMBER 50006404-C
MATERIAL CMS01
SURF. FINISH / PAINTSPEC. -
COLOR -
WEIGHT 4.8 Lbs 2.2 kg
ORIGINAL DOCUMENT
NAME M.S.
DATE 22-Sep-05
LATEST REVISION
NAME C.L.
DATE 16-NOV-06
E.C.N. 0700387
REV. A
UNLESS OTHERWISE SPECIFIED
TOLERANCES (PER ANSI Y 14.5)
3 PLACE DECIMAL .XXX ± .010
2 PLACE DECIMAL .XX ± .03
1 PLACE DECIMAL .X ± .1
ANGLES ± .5 DEGREE
BREAK SHARP CORNERS .010 ± .005
MACHINED SURFACES
TORCHCUT SURFACES
DO NOT SCALE DOCUMENT
THIS DOCUMENT IS PDMLink CONTROLLED
NATIONAL OILWELL VARCO
THIS DOCUMENT CONTAINS PROPRIETARY INFORMATION AND SUCH INFORMATION MAY NOT BE DISCLOSED TO OTHERS FOR ANY PURPOSE, NOR USED FOR MANUFACTURING PURPOSES, WITHOUT WRITTEN PERMISSION OF THE OWNER
SCALE 1:1
UNITS INCH (mm)
PROJ.
TITLE SMX CAMLATCH
SIZE B
DRAWING NO. CA-324-C
SHEET 1 OF 1

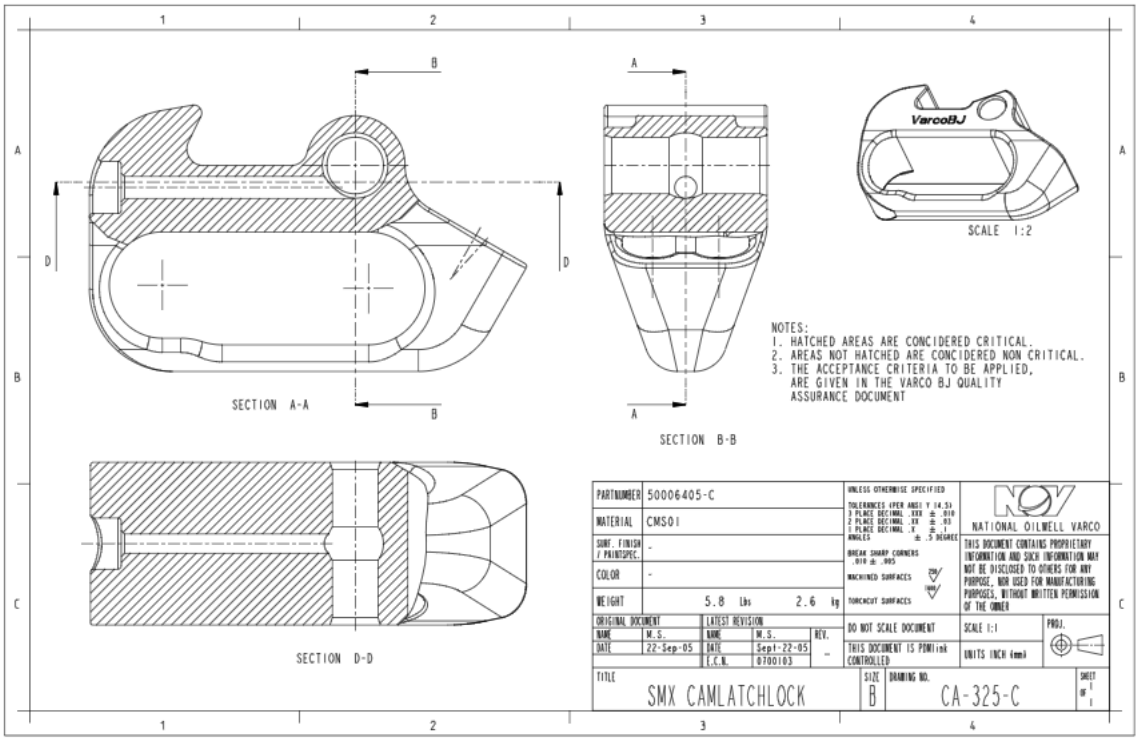
SECTION A-A
SECTION B-B
SECTION D-D
VarcoBJ
SCALE 1:2
NOTES:
1. HATCHED AREAS ARE CONCIDERED CRITICAL.
2. AREAS NOT HATCHED ARE CONCIDERED NON CRITICAL.
3. THE ACCEPTANCE CRITERIA TO BE APPLIED, ARE GIVEN IN THE VARCO BJ QUALITY ASSURANCE DOCUMENT
PARTNUMBER 50006405-C
MATERIAL CMS01
SURF. FINISH / PAINTSPEC. -
COLOR -
WEIGHT 5.8 Lbs 2.6 kg
ORIGINAL DOCUMENT
NAME M.S.
DATE 22-Sep-05
LATEST REVISION
NAME M.S.
DATE Sept-22-05
E.C.N. 0700103
REV. -
UNLESS OTHERWISE SPECIFIED
TOLERANCES (PER ANSI Y 14.5)
3 PLACE DECIMAL .XXX ± .010
2 PLACE DECIMAL .XX ± .03
1 PLACE DECIMAL .X ± .1
ANGLES ± .5 DEGREE
BREAK SHARP CORNERS .010 ± .005
MACHINED SURFACES
TORCHCUT SURFACES
DO NOT SCALE DOCUMENT
THIS DOCUMENT IS PDMLink CONTROLLED
NATIONAL OILWELL VARCO
THIS DOCUMENT CONTAINS PROPRIETARY INFORMATION AND SUCH INFORMATION MAY NOT BE DISCLOSED TO OTHERS FOR ANY PURPOSE, NOR USED FOR MANUFACTURING PURPOSES, WITHOUT WRITTEN PERMISSION OF THE OWNER
SCALE 1:1
UNITS INCH (mm)
PROJ.
TITLE SMX CAMLATCHLOCK
SIZE B
DRAWING NO. CA-325-C
SHEET 1 OF 1

Wear data drawings

WARNING

THE INSPECTION CRITERIA AND MAXIMUM WEAR ALLOWANCES CONTAINED IN THIS (THESE) DOCUMENT(S) ARE ONLY VALID WHEN THE RELATED EQUIPMENT IS IN OTHERWISE GOOD CONDITION, HAS NOT BEEN MISUSED, AND DOES NOT HAVE EXCESSIVE WEAR, CRACKS OR OTHER DEFECTS, OR PREVIOUS WELD REPAIR THESE INSPECTION CRITERIA AND MAXIMUM WEAR ALLOWANCES APPLY ONLY TO CERTAIN CRITICAL COMPONENTS AND, AS SUCH, CANNOT ON THEIR OWN DETERMINE THE OVERALL CONDITION OF THE EQUIPMENT AND ITS SUITABILITY FOR CONTINUED USE

ORIGINAL

Varco, B.J. OIL TOOLS

TITLE: WEAR DATA GENERAL WARNING

SIZE B — DRAWING NO. WD-000 — SHEET 1 OF 1

ADD FILE NO: WDB000.DWG

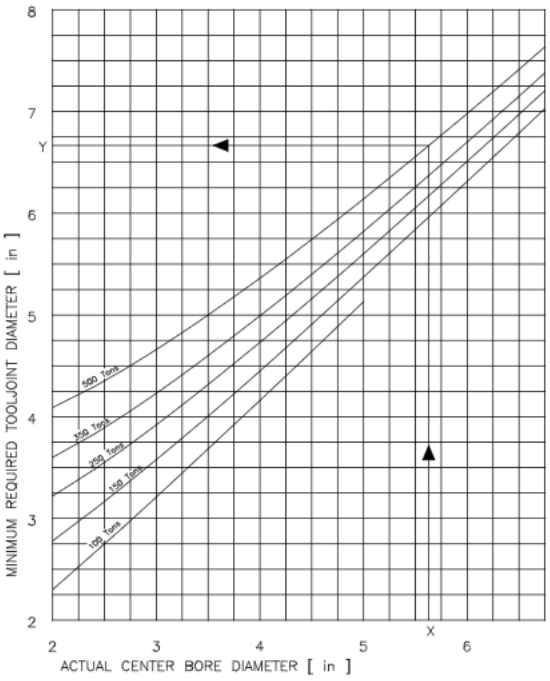

How to check your center bore:

1. Determine your actual center bore diameter (largest) in inches. (X)
2. The maximum wear on the diameter of the center bore is 0.25". But:
3. Before using your elevator, always check the tooljoint/bore combination by means of the table on the left.
4. Follow the line up to the line corresponding with the rating of your elevator. (Rating in short tons.)
5. Read on the left the minimum required tooljoint diameter in inches that can safely be handled with your elevator. (Y)

As soon as your tooljoint diameter falls below the corresponding rating line, you have to change either your elevator or your pipe.

Note:

In case your elevator has a wearbushing, keep this wearbushing in good condition to prevent wear of your center bore.

Varco, B.J. OIL TOOLS — ETTEN-LEUR, THE NETHERLANDS

TITLE: TOOLJOINT/BORE WEAR TABLE 18" BORE TYPE ELEVATORS

SIZE B — DRAWING NO. WD-001 — SHEET 1 OF 1

ADD FILE NO: WDB001.DWG

MAX. WEAR DATA FOR 18" CENTER LATCH ELEV. TO MAINTAIN 100% RATING

B-WD-010

	ELEVATOR TYPE	GG	GG-AO	MGG	MGG	MGG-AO	HGG	HGG-AO	MG	RG	RG	RG	RGG
	RATED CAPACITY	350 TONS	350 TONS	175 TONS	250 TONS	250 TONS	500 TONS	500 TONS	100 TONS	125 TONS	175 TONS	200 TONS	150 TONS
	PART NO. ASS'Y	31068(-)	35143(-)	13884(-)	35005(-)	36056(-)	70013(-)	70222(-)	30157(-)	30156(-)	23540(-)	23606(-)	200680(-)
	SIZE	4 -- 5-1/2	4 -- 5-1/2	2-3/8 -- 5-1/2	3-1/2 -- 5-1/2	3-1/2 -- 5-1/2	4 -- 6-5/8	4 -- 6-5/8	2-3/8 -- 5	2-3/8 -- 5-1/2	4 -- 6-1/2	5 -- 5-1/2	2-3/8--5-1/2
STANDARD PINS	HINGE PIN SIDE												
	HINGE PIN PART. NO.	33998	35141	13888	34908	36058	30553	70217	26813	23569	23545	23609	200683
	TOTAL CLEARANCE "A"	0.045	0.045	0.030	0.030	0.030	0.045	0.045	0.030	0.030	0.030	0.030	0.030
	HINGE PIN DIA. NEW MIN.	2.494	2.494	1.870	2.307	2.307	3.243	3.243	1.495	1.745	1.994	2.119	1.870
	BORE DIA. NEW MAX.	2.502	2.502	1.877	2.315	2.315	3.252	3.252	1.502	1.752	2.002	2.127	1.877
	BORE DIA. WORN MAX.	2.525	2.525	1.895	2.333	2.333	3.275	3.275	1.520	1.770	2.020	2.145	1.895
	LATCH PIN SIDE												
	LATCH PIN PART. NO.	33999	33999	13154	34907	34907	30613	30613	26814	23544	24045	24045	200684
	TOTAL CLEARANCE "B"	0.035	0.035	0.030	0.030	0.030	0.045	0.045	0.030	0.030	0.030	0.030	0.030
	LATCH PIN DIA. NEW MIN.	1.870	1.870	1.495	1.682	1.682	2.244	2.244	1.120	1.245	1.495	1.495	1.495
	BORE DIA. NEW MAX.	1.877	1.877	1.502	1.689	1.689	2.252	2.252	1.127	1.252	1.502	1.502	1.502
	BORE DIA. WORN MAX.	1.895	1.895	1.520	1.708	1.708	2.275	2.275	1.145	1.270	1.520	1.520	1.520
1/16 OVERSIZE PINS	HINGE PIN SIDE												
	HINGE PIN PART. NO.	33998-06	35141-06	13888-06	34908-06	36058-06	30553-06	70217-06	26813-06	23569-06	23545-06	23609-06	200683-06
	TOTAL CLEARANCE "A"	0.045	0.045	0.030	0.030	0.030	0.045	0.045	0.030	0.030	0.030	0.030	0.030
	HINGE PIN DIA. NEW MIN.	2.557	2.557	1.933	2.370	2.370	3.306	3.306	1.558	1.807	2.057	2.182	1.933
	BORE DIA. NEW MAX.	2.565	2.565	1.940	2.378	2.378	3.315	3.315	1.565	1.814	2.065	2.190	1.940
	BORE DIA. WORN MAX.	2.588	2.588	1.958	2.396	2.396	3.338	3.338	1.583	1.833	2.083	2.208	1.958
	LATCH PIN SIDE												
	LATCH PIN PART. NO.	33999-06	33999-06	13154-06	34907-06	34907-06	30613-06	30613-06	26814-06	23544-06	24045-06	24045-06	200684-06
	TOTAL CLEARANCE "B"	0.035	0.035	0.030	0.030	0.030	0.045	0.045	0.030	0.030	0.030	0.030	0.030
	LATCH PIN DIA. NEW MIN.	1.933	1.933	1.558	1.745	1.745	2.307	2.307	1.183	1.308	1.558	1.558	1.558
	BORE DIA. NEW MAX.	1.940	1.940	1.565	1.752	1.752	2.315	2.315	1.190	1.315	1.565	1.565	1.565
	BORE DIA. WORN MAX.	1.958	1.958	1.583	1.770	1.770	2.338	2.338	1.208	1.333	1.583	1.583	1.583
1/8 OVERSIZE PINS	HINGE PIN SIDE												
	HINGE PIN PART. NO.	33998-12	35141-12	13888-12	34908-12	36058-12	30553-12	70217-12	26813-12	23569-12	23545-12	23609-12	200683-12
	TOTAL CLEARANCE "A"	0.045	0.045	0.030	0.030	0.030	0.045	0.045	0.030	0.030	0.030	0.030	0.030
	HINGE PIN DIA. NEW MIN.	2.619	2.619	1.994	2.432	2.432	3.368	3.368	1.620	1.870	2.119	2.244	1.994
	BORE DIA. NEW MAX.	2.627	2.627 △1	2.002	2.440	2.440	3.377	3.377	1.627	1.877	2.127	2.252	2.002
	BORE DIA. WORN MAX.	2.650	2.650 △1	2.020	2.458	2.458	3.400	3.400	1.645	1.895	2.045	2.270	2.020
	LATCH PIN SIDE												
	LATCH PIN PART. NO.	33999-12	33999-12		34907-12	34907-12	30613-12	30613-12	26814-12				
	TOTAL CLEARANCE "B"	0.035	0.035		0.030	0.030	0.045	0.045	0.030				
	LATCH PIN DIA. NEW MIN.	1.994	1.994		1.807	1.807	2.369	2.369	1.245				
	BORE DIA. NEW MAX.	2.002	2.002		1.814	1.814	2.377	2.377	1.252				
	BORE DIA. WORN MAX.	2.020	2.020		1.832	1.832	2.400	2.400	1.270				
EARS	DIMENSION "D" MIN.	4.50	4.50	3.00	4.25	4.25	5.75	5.75	3.75	4.00 △1	4.00	4.00	3.625 △1
	RADIUS "R" *	1.875	1.875	2.00	1.875	1.875	2.50	2.50	1.50	1.625	1.625	1.625	2.00
	DIMENSION "E" *	7.375	7.375	6.25	6.813	6.813	8.625	8.625	5.00	5.125	5.625	6.625	6.25

* = PLACE WHERE "D" IS TO BE MEASURED. (SEE SHEET 2)

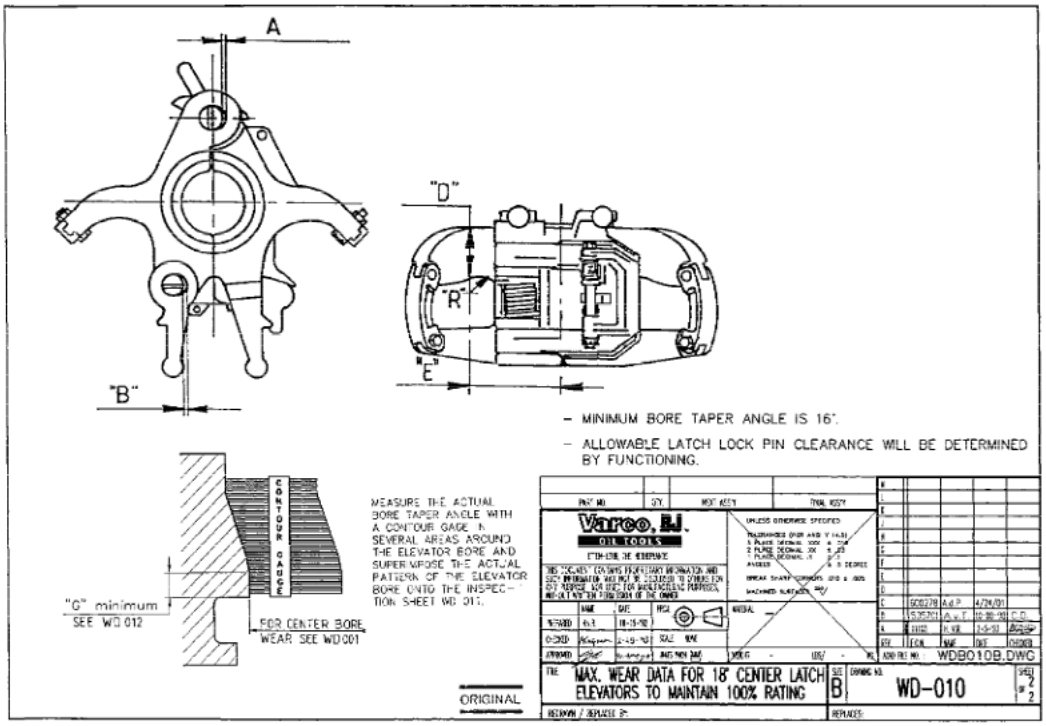

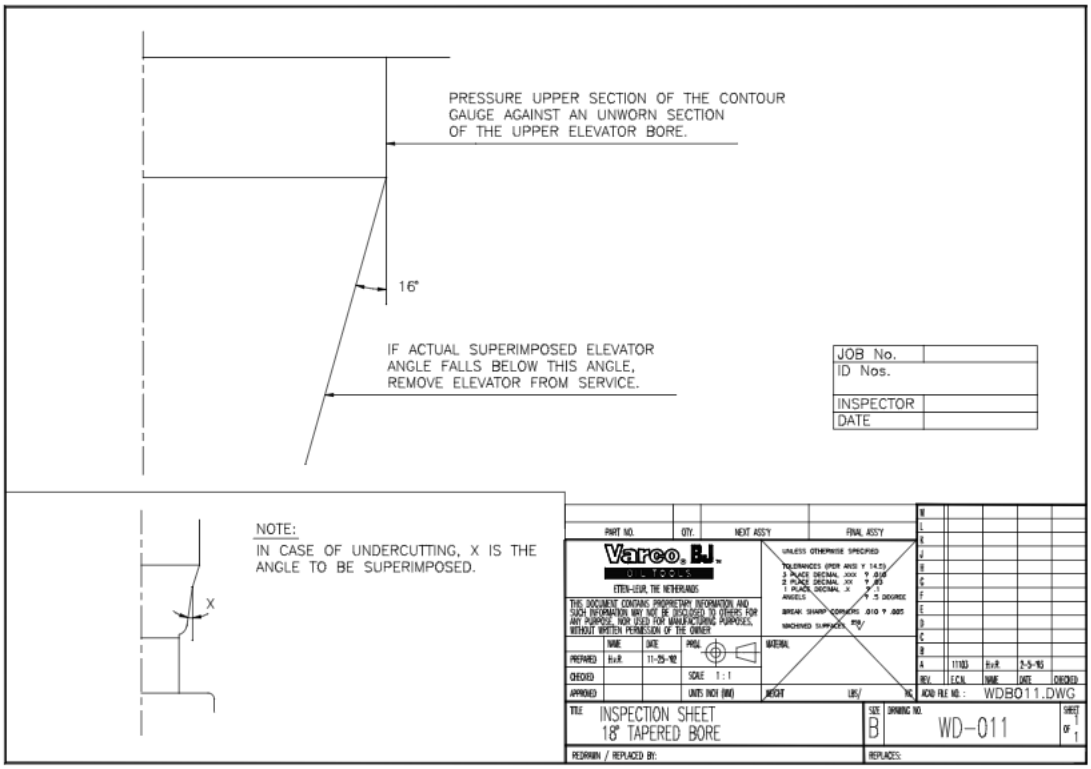

ORIGINAL

MAX. WEAR DATA FOR SJ/SP/SJL/SPL ELEVATORS TO MAINTAIN 100% RATING

B-WD-020 SHEET 1 OF 2

	ELEVATOR TYPE	SJ	SJ	SJ	SJ(L) ⚠	SJL	SJL	SJL	SP	SP	SPL	SPL
	RATED CAPACITY	5 TONS	5 TONS	5 TONS	5 TONS	5 TONS	5 TONS	5 TONS	5 TONS	5 TONS	5 TONS	5 TONS
	PART NO. ASS'Y											
	SIZE	⚠4 -- 7-5/8	8-5/8 -- 13-3/8	16 -- 24-1/2	2-3/8 -- 3-1/2	4 -- 7-5/8	8-5/8 -- 13-3/8	16 -- 24-1/2	2-3/8 -- 7-5/8	8-5/8 -- 13-3/4	2-3/8 -- 7-5/8	8-5/8 -- 13-3/4
STANDARD PINS	HINGE PIN SIDE											
	HINGE PIN PART. NO.	33032	33032	33033	33032	200050	200050	200051	33032	33032	200050	200050
	TOTAL CLEARANCE "A"	0.025	0.020	0.015	0.025	0.025	0.020	0.015	0.025	0.020	0.025	0.020
	HINGE PIN DIA. NEW MIN.	0.995	0.996	1.184	0.995	0.995	0.996	1.184	0.995	0.996	0.995	0.996
	BORE DIA. NEW MAX.	1.001	1.001	1.190	1.001	1.001	1.001	1.190	1.001	1.001	1.001	1.001
	BORE DIA. WORN MAX.	1.015	1.012	1.198	1.015	1.015	1.012	1.198	1.015	1.012	1.015	1.012
	LATCH PIN SIDE											
	LATCH PIN PART. NO.	33035	33035	33035	33035	33035	33035	33035	33035	33035	33035	33035
	TOTAL CLEARANCE "B"	0.025	0.025	0.025	0.025	0.025	0.025	0.025	0.025	0.025	0.025	0.025
	LATCH PIN DIA. NEW MIN.	0.622	0.622	0.622	0.622	0.622	0.622	0.622	0.622	0.622	0.622	0.622
	BORE DIA. NEW MAX.	0.627	0.627	0.627	0.627	0.627	0.627	0.627	0.627	0.627	0.627	0.627
	BORE DIA. WORN MAX.	0.640	0.640	0.640	0.640	0.640	0.640	0.640	0.640	0.640	0.640	0.640
1/16 OVERSIZE	HINGE PIN SIDE											
	HINGE PIN PART. NO.	33032-06	33032-06	33033-06	33032-06	200050-06	200050-06	200051-06	33032-06	33032-06	200050-06	200050-06
	TOTAL CLEARANCE "A"	0.025	0.020	0.015	0.025	0.025	0.020	0.015	0.025	0.020	0.025	0.020
	HINGE PIN DIA. NEW MIN.	1.059	1.059	1.245	1.059	1.059	1.059	1.245	1.059	1.059	1.059	1.059
	BORE DIA. NEW MAX.	1.064	1.064	1.253	1.064	1.064	1.064	1.253	1.064	1.064	1.064	1.064
	BORE DIA. WORN MAX.	1.078	1.075	1.260	1.078	1.078	1.075	1.260	1.078	1.075	1.078	1.075
	LATCH PIN SIDE											
	LATCH PIN PART. NO.	33035-06	33035-06	33035-06	33035-06	33035-06	33035-06	33035-06	33035-06	33035-06	33035-06	33035-06
	TOTAL CLEARANCE "B"	0.025	0.025	0.025	0.025	0.025	0.025	0.025	0.025	0.025	0.025	0.025
	LATCH PIN DIA. NEW MIN.	0.685	0.685	0.685	0.685	0.685	0.685	0.685	0.685	0.685	0.685	0.685
	BORE DIA. NEW MAX.	0.690	0.690	0.690	0.690	0.690	0.690	0.690	0.690	0.690	0.690	0.690
	BORE DIA. WORN MAX.	0.703	0.703	0.703	0.703	0.703	0.703	0.703	0.703	0.703	0.703	0.703
1/8 OVERSIZE	HINGE PIN SIDE											
	HINGE PIN PART. NO.	33032-12	33032-12	33033-12	⚠	200050-12	200050-12	200051-12	33032-12	33032-12	200050-12	200050-12
	TOTAL CLEARANCE "A"	0.025	0.020	0.015		0.025	0.020	0.015	0.025	0.020	0.025	0.020
	HINGE PIN DIA. NEW MIN.	1.121	1.121	1.308		1.121	1.121	1.308	1.121	1.121	1.121	1.121
	BORE DIA. NEW MAX.	1.126	1.126	1.315		1.126	1.126	1.315	1.126	1.126	1.126	1.126
	BORE DIA. WORN MAX.	1.140	1.137	1.323		1.140	1.137	1.323	1.140	1.137	1.140	1.137
	LATCH PIN SIDE											
	LATCH PIN PART. NO.											
	TOTAL CLEARANCE "B"											
	LATCH PIN DIA. NEW MIN.											
	BORE DIA. NEW MAX.											
	BORE DIA. WORN MAX.											
EARS	DIMENSION "D" MIN.	0.75	0.75	0.75	0.75	0.75	0.75	0.75	0.75	0.75	0.75	0.75
	RADIUS "R" *	0.625	0.625	0.625	0.625	0.625	0.625	0.625	0.625	0.625	0.625	0.625

* - PLACE WHERE "D" IS TO BE MEASURED. (SEE SHEET 2)

REPLACES B-WD-020 SHT 1 TRK 4

ACAD FILE NO. WDB020A

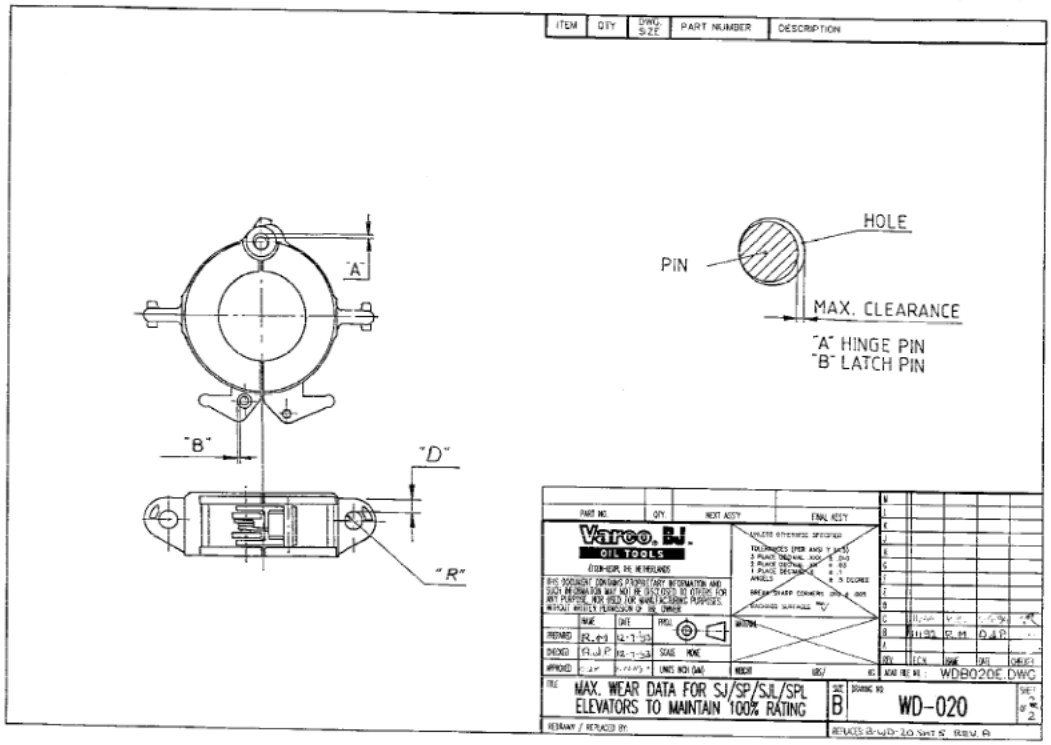
ITEM
QTY
DWG. SIZE
PART NUMBER
DESCRIPTION
"A"
"B"
"D"
"R"
HOLE
PIN
MAX. CLEARANCE
"A" HINGE PIN
"B" LATCH PIN
Varco B.J.
OIL TOOLS
ETEN-LEUR, THE NETHERLANDS
MAX. WEAR DATA FOR SJ/SP/SJL/SPL
ELEVATORS TO MAINTAIN 100% RATING
WD-020
WDB020E.DWG

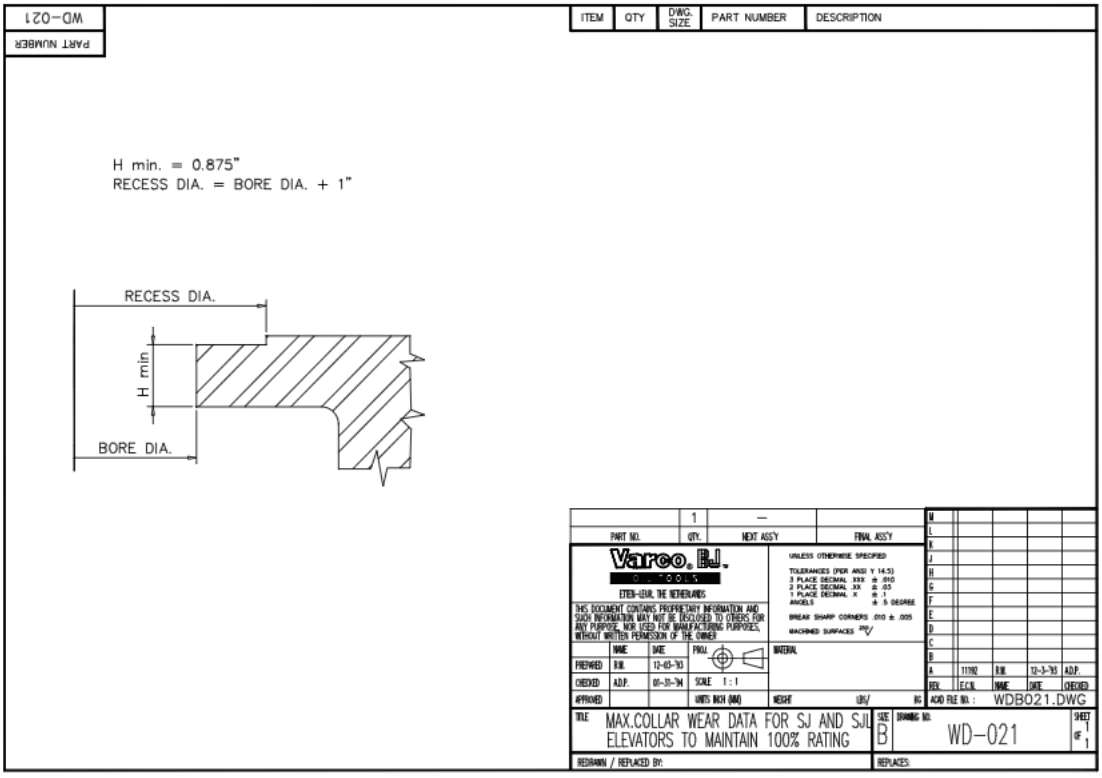
WD-021
PART NUMBER
ITEM
QTY
DWG. SIZE
PART NUMBER
DESCRIPTION
H min. = 0.875"
RECESS DIA. = BORE DIA. + 1"
RECESS DIA.
H min
BORE DIA.
Varco B.J.
OIL TOOLS
ETEN-LEUR, THE NETHERLANDS
MAX.COLLAR WEAR DATA FOR SJ AND SJL
ELEVATORS TO MAINTAIN 100% RATING
WD-021
WDB021.DWG

MAX. WEAR DATA FOR VARCO BJ SX ELEV. TO MAINTAIN 100% RATING

B-WD-040 # 1 3

	ELEVATOR TYPE	SX	SX	SX	SX	SX	SX
	RATED CAPACITY	750 TON	350 TON	500 TON	500 TON	250 TON	750 TON
	PART NO. ASS'Y	51285	29965	29964	30729	30598	52644
	SIZE	12-3/4 -14	13-3/8	13-3/8	16	20	7-14
STANDARD PINS	HINGE PIN SIDE						
	HINGE PIN PART. NO.	51442	29956	29956	29956	29956	SEE 51285
	TOTAL CLEARANCE "A"	0.045	0.030	0.030	0.030	0.030	
	HINGE PIN DIA. NEW MIN	2.494	2.119	2.119	2.119	2.119	
	BORE DIA. NEW MAX	2.502	2.127	2.127	2.127	2.127	
	BORE DIA. WORN MAX.	2.525	2.145	2.145	2.145	2.145	
	LATCH PIN SIDE						
	LATCH PIN PART. NO.	51443	29951	29951	30696	29951	
	TOTAL CLEARANCE "B"	0.035	0.035	0.035	0.035	0.035	
	LATCH PIN DIA. NEW MIN	1.121	1.121	1.121	1.121	1.121	
	BORE DIA. NEW MAX	1.127	1.127	1.127	1.127	1.127	
	BORE DIA. WORN MAX.	1.145	1.145	1.145	1.145	1.145	
1/16 OVERSIZE PINS	HINGE PIN SIDE						
	HINGE PIN PART. NO.	51442-06	29956-06	29956-06	29956-06	29956-06	
	TOTAL CLEARANCE "A"	0.045	0.030	0.030	0.030	0.030	
	HINGE PIN DIA. NEW MIN	2.556	2.182	2.182	2.182	2.182	
	BORE DIA. NEW MAX	2.565	2.190	2.190	2.190	2.190	
	BORE DIA. WORN MAX.	2.588	2.208	2.208	2.208	2.208	
	LATCH PIN SIDE						
	LATCH PIN PART. NO.	51443-06	29951-06	29951-06	30696-06	29951-06	
	TOTAL CLEARANCE "B"	0.035	0.035	0.035	0.035	0.035	
	LATCH PIN DIA. NEW MIN	1.182	1.182	1.182	1.182	1.182	
	BORE DIA. NEW MAX	1.190	1.190	1.190	1.190	1.190	
	BORE DIA. WORN MAX.	1.208	1.208	1.208	1.208	1.208	
1/8 OVERSIZE PINS	HINGE PIN SIDE						
	HINGE PIN PART. NO.	51442-12	29956-12	29956-12	29956-12	29956-12	
	TOTAL CLEARANCE "A"	0.045	0.030	0.030	0.030	0.030	
	HINGE PIN DIA. NEW MIN	2.619	2.244	2.244	2.244	2.244	
	BORE DIA. NEW MAX	2.627	2.252	2.252	2.252	2.252	
	BORE DIA. WORN MAX.	2.652	2.270	2.270	2.270	2.270	
	LATCH PIN SIDE						
	LATCH PIN PART. NO.		29951-12	29951-12	30696-12	29951-12	
	TOTAL CLEARANCE "B"		0.035	0.035	0.035	0.035	
	LATCH PIN DIA. NEW MIN		1.245	1.245	1.245	1.245	
	BORE DIA. NEW MAX		1.252	1.252	1.252	1.252	
	BORE DIA. WORN MAX.		1.270	1.270	1.270	1.270	
EARS	DIMENSION "D" MIN.	6.750"	4.500"	5.750"	5.500"	4.500"	
	RADIUS "R" *	3.000"	2.000"	2.000"	2.000"	2.000"	
	DIMENSION "E" *	17.000"	15.000"	15.000"	15.500"	18.000"	

* PLACE WHERE "D" IS TO BE MEASURED. (SEE SHEET 3)

ACAD FILE NO. WDB040A

MAX. WEAR DATA FOR VARCO BJ SLX ELEV. TO MAINTAIN 100% RATING

B-WD-040 # 2 3

	ELEVATOR TYPE	SLX	SLX	SLX	SLX	SLX	SLX	SLX	SLX	SLX	SLX	SLX
	RATED CAPACITY	65 TONS	100 TONS	100 TONS	100 TONS	150 TONS	150 TONS	150 TONS	150 TONS	150 TONS	150 TONS	250 TONS
	PART NO. ASS'Y	33734	33693	33809	33854	31239	33950	33982	34087	33632	52755	34175
	SIZE	1.660_1.900	2-3/8_3-7/8	3-1/2_4	4-1/2_5-1/2	6-5/8_8-5/8	9-5/8_10-3/4	11-3/4_13-3/8	16	18-5/8_20	24-30	24-1/2
STANDARD PINS	HINGE PIN SIDE											
	HINGE PIN PART. NO.	32424-3	32424-5	34612	34613	34611	33953	33985	33646	33646	52763	34179
	TOTAL CLEARANCE "A"	0.020	0.020	0.025	0.025	0.030	0.030	0.035	0.035	0.035	0.045	0.045
	HINGE PIN DIA. NEW MIN	0.746	0.746	0.996	0.871	1.121	1.495	1.870	1.870	1.870	2.494	2.494
	BORE DIA. NEW MAX	0.752	0.752	1.002	0.877	1.127	1.502	1.877	1.877	1.877	2.502	2.502
	BORE DIA. WORN MAX.	0.762	0.762	1.017	0.892	1.145	1.520	1.895	1.895	1.895	2.525	2.525
	LATCH PIN SIDE											
	LATCH PIN PART. NO.	33700-2	33700-2	29980-3	29980-3	32424-3	32424-3	32424-3	33645	33645	52760	33645
	TOTAL CLEARANCE "B"	0.020	0.020	0.025	0.025	0.030	0.030	0.030	0.035	0.035	0.035	0.035
	LATCH PIN DIA. NEW MIN	0.497	0.497	0.622	0.622	0.746	0.746	0.746	0.996	0.996	1.245	0.996
	BORE DIA. NEW MAX	0.501	0.501	0.626	0.626	0.752	0.752	0.752	1.002	1.002	1.252	1.002
	BORE DIA. WORN MAX.	0.512	0.512	0.640	0.640	0.770	0.770	0.770	1.020	1.020	1.270	1.020
1/16 OVERSIZE PINS	HINGE PIN SIDE											
	HINGE PIN PART. NO.	32424-306	32424-506	34612-06	34613-06	34611-06	33953-06	33985-306	33646-06	33646-06	52763-06	34179-06
	TOTAL CLEARANCE "A"	0.020	0.020	0.025	0.025	0.030	0.030	0.035	0.035	0.035	0.045	0.045
	HINGE PIN DIA. NEW MIN	0.808	0.808	1.058	0.933	1.183	1.557	1.932	1.932	1.932	2.556	2.556
	BORE DIA. NEW MAX	0.815	0.815	1.065	0.940	1.190	1.565	1.940	1.940	1.940	2.565	2.565
	BORE DIA. WORN MAX.	0.825	0.825	1.078	0.953	1.208	1.583	1.958	1.958	1.958	2.588	2.588
	LATCH PIN SIDE											
	LATCH PIN PART. NO.	33700-206	33700-206	29980-306	29980-306	32424-306	32424-306	32424-306	33645-06	33645-06	52760-06	33645-06
	TOTAL CLEARANCE "B"	0.020	0.020	0.025	0.025	0.030	0.030	0.030	0.035	0.035	0.035	0.035
	LATCH PIN DIA. NEW MIN	0.559	0.559	0.684	0.684	0.808	0.808	0.808	1.058	1.058	1.307	1.058
	BORE DIA. NEW MAX	0.564	0.564	0.689	0.689	0.815	0.815	0.815	1.065	1.065	1.315	1.065
	BORE DIA. WORN MAX.	0.575	0.575	0.703	0.703	0.833	0.833	0.833	1.083	1.083	1.333	1.083
1/8 OVERSIZE PINS	HINGE PIN SIDE											
	HINGE PIN PART. NO.	32424-312	32424-512	34612-12	34613-12	34611-12	33953-12	33985-12	33646-12	33646-12	52763-12	34179-12
	TOTAL CLEARANCE "A"	0.020	0.020	0.025	0.025	0.030	0.030	0.035	0.035	0.035	0.045	0.045
	HINGE PIN DIA. NEW MIN	0.871	0.871	1.121	0.996	1.245	1.620	1.994	1.994	1.994	2.619	2.619
	BORE DIA. NEW MAX	0.877	0.877	1.127	1.002	1.252	1.627	2.002	2.002	2.002	2.627	2.627
	BORE DIA. WORN MAX.	0.887	0.887	1.140	1.015	1.270	1.645	2.020	2.020	2.020	2.650	2.650
	LATCH PIN SIDE											
	LATCH PIN PART. NO.											
	TOTAL CLEARANCE "B"											
	LATCH PIN DIA. NEW MIN											
	BORE DIA. NEW MAX											
	BORE DIA. WORN MAX.											
EARS	DIMENSION "D" MIN.	2.250"	2.875"	2.875"	2.875"	3.687"	3.687"	3.687"	3.500"	3.500"	3.500"	4.687"
	RADIUS "R" *	1.250"	1.500"	1.500"	1.500"	2.000"	2.000"	2.000"	2.000"	2.000"	2.000"	2.000"
	DIMENSION "E" *	5.750"	6.000"	6.750"	7.937"	10.625"	11.500"	13.750"	15.375"	17.250"	26.375"	20.562"

* PLACE WHERE "D" IS TO BE MEASURED. (SEE SHEET 3)

ACAD FILE NO. WDB040B

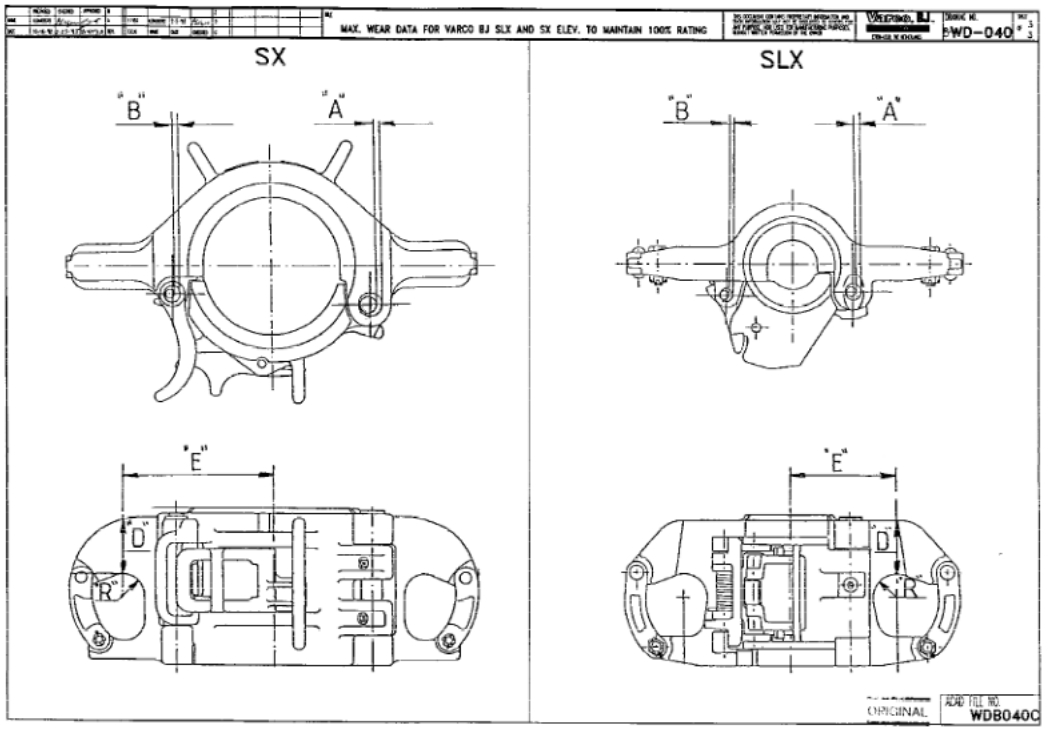

MAX. COLLAR WEAR DATA FOR VARCO BJ SX ELEV. TO MAINTAIN 100 % RATING

B-WD-041

ELEVATOR TYPE	SX	SX	SX	SX	SX	SX
RATED CAPACITY	750 TON	350 TON	500 TON	500 TON	250 TON	750 TON
PART NO. ASS'Y	51285	29965	29964	30729	30598	52644
SIZE	12-3/4 -- 14	9-5/8--13-3/8	9-5/8--13-3/8	16	20	7--14
BORE SIZE		ALL	ALL		ALL	
H min. (Ref.)		FLAT(2-1/2)	FLAT(2-1/2)		FLAT(1-3/4)	
BORE SIZE						
H min. (Ref.)						

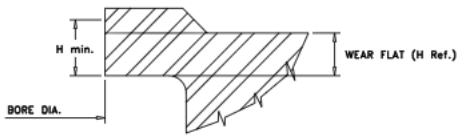

ACAD FILE NO.
WDB041A

MAX. COLLAR WEAR DATA FOR VARCO BJ SLX ELEV. TO MAINTAIN 100 % RATING

B-WD-041

ELEVATOR TYPE	SLX	SLX	SLX	SLX	SLX	SLX	SLX	SLX	SLX	SLX	SLX
RATED CAPACITY	65 TONS	100 TONS	100 TONS	100 TONS	150 TONS	150 TONS	150 TONS	150 TONS	150 TONS	150 TONS	250 TONS
PART NO. ASS'Y	33734	33693	33809	33854	31239	33950	33982	34087	33632	52755	34175
SIZE	1.660_1.900	2-3/8_2-7/8	3-1/2_4	4-1/2_5-1/2	5-1/2_6-5/8	9-5/8_10-3/4	11-3/4_13-3/8	16	18-5/8_20	24-30	24-1/2
BORE SIZE	< 2	ALL	ALL	ALL	≤ 5-7/8	ALL	ALL	ALL	ALL	ALL	ALL
H min.	1-5/16	FL.(1-9/16)	FLAT(1-1/4)	FLAT(1-1/2)	1-5/8	FLAT(1-1/2)	FLAT(1-3/4)	FLAT(1-3/4)	FLAT(1-3/4)	FLAT(2)	FLAT(1-3/4)
BORE SIZE	> 2				> 5-7/8						
H min.	FLAT(1-1/4)				FLAT(1-1/2)						
BORE SIZE											
H min.											

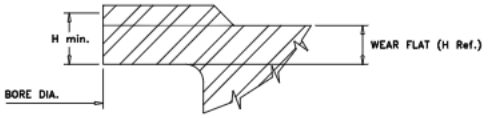

ACAD FILE NO. WDB041B

MAX. WEAR DATA FOR VARCO BJ TA AND RA ELEV. TO MAINTAIN 100% RATING

B-WD-050

	ELEVATOR TYPE	RA				TA		TA			TA		TA
	RATED CAPACITY	125 TONS	150 TONS	175 TONS	175 TONS	150 TONS	150 TONS	100 TONS	100 TONS	100 TONS	65 TONS	65 TONS	35 TONS
	PART NO. ASS'Y	25462(–)	25459(–)	25456(–)	25453(–)	32754(–)	39342(–)	32383(–)	32384(–)	200000	32385(–)	32386(–)	32387(–)
	SIZE	2-3/8 – 3-1/2	4 – 4-1/2	4-1/2 – 5-1/2	6-5/8 – 7	4-1/2 – 8-5/8	8-1/2 – 11-1/4	2-3/8 – 2-7/8	3-1/2 – 5	4-3/4 – 8-5/8	1.660 – 2-7/8	3-1/2 – 4-1/2	1.050 – 2-7/8
STANDARD PINS	HINGE PIN SIDE												
	HINGE PIN PART. NO.	5251–1	12704–1	25590	25590	32924	32924	32915	32919	32919	32916	32915	32917
	TOTAL CLEARANCE "A"	0.030	0.030	0.030	0.030	0.035	0.035	0.030	0.035	0.035	0.030	0.030	0.030
	HINGE PIN DIA. NEW MIN.	1.245	1.495	1.621	1.621	2.369	2.369	1.745	1.933	1.933	1.620	1.745	1.245
	BORE DIA. NEW MAX.	1.252	1.502	1.627	1.627	2.377	2.377	1.752	1.940	1.940	1.627	1.752	1.252
	BORE DIA. WORN MAX.	1.270	1.520	1.645	1.645	2.395	2.395	1.770	1.958	1.958	1.645	1.770	1.270
	LATCH PIN SIDE												
	LATCH PIN PART. NO.	5389–1	5445–1	5470–1	5470–1	32762	32762	50713	32424–1	200004	32424–3	50713	32424–4
	TOTAL CLEARANCE "B"	0.035	0.035	0.035	0.035	0.035	0.035	0.030	0.030	0.035	0.030	0.030 △1	0.030
	LATCH PIN DIA. NEW MIN.	0.996	1.121	1.121	1.121	1.120	1.120	0.746	0.745	1.121	0.746	0.746	0.622
	BORE DIA. NEW MAX.	1.002	1.127	1.127	1.127	1.127	1.127	0.752	0.752	1.127	0.752	0.752	0.626
	BORE DIA. WORN MAX.	1.020	1.145	1.145	1.145	1.145	1.145	0.770	0.770	1.145	0.770	0.770	0.645
1/16 OVERSIZED PINS	HINGE PIN SIDE												
	HINGE PIN PART. NO.	5251–1–06	12704–1–06			32924–06	32924–06	32915–06	32919–06	32919–06	32916–06	32915–06	32917–06
	TOTAL CLEARANCE "A"	0.030	0.030			0.035	0.035	0.030	0.035	0.035	0.030	0.030	0.030
	HINGE PIN DIA. NEW MIN.	1.307	1.557			2.432	2.432	1.808	1.994	1.994	1.683	1.808	1.307
	BORE DIA. NEW MAX.	1.315	1.565			2.440	2.440	1.815	2.002	2.002	1.690	1.815	1.315
	BORE DIA. WORN MAX.	1.333	1.583			2.458	2.458	1.833	2.020	2.020	1.708	1.833	1.333
	LATCH PIN SIDE								△2		△2	△2	△2
	LATCH PIN PART. NO.		5445–1–06			32762–06	32762–06	50713–06	32424–106	200004–06	32424–306	50713–06	32424–406
	TOTAL CLEARANCE "B"		0.035			0.035	0.035	0.030	0.030	0.035	0.030	0.030	0.030
	LATCH PIN DIA. NEW MIN.		1.183			1.183	1.183	0.808	0.808	1.183	0.809	0.808	0.684
	BORE DIA. NEW MAX.		1.190			1.190	1.190	0.815	0.815	1.190	0.815	0.815	0.689
	BORE DIA. WORN MAX.		1.208			1.208	1.208	0.833	0.833	1.208	0.833	0.833	0.707
1/8 OVERSIZED PINS	HINGE PIN SIDE												
	HINGE PIN PART. NO.	5251–1–12	12704–1–12			32924–12	32924–12	32915–12		32919–12	32916–12	32915–12	32912–12
	TOTAL CLEARANCE "A"	0.030	0.030			0.035	0.035	0.030		0.035	0.030	0.030	0.030
	HINGE PIN DIA. NEW MIN.	1.370	1.621			2.494	2.494	1.870		2.056	1.745	1.870	1.370
	BORE DIA. NEW MAX.	1.377	1.627			2.502	2.502	1.877		2.065	1.752	1.877	1.377
	BORE DIA. WORN MAX.	1.395	1.645			2.520	2.520	1.895		2.083	1.770	1.895	1.395
	LATCH PIN SIDE												
	LATCH PIN PART. NO.		5445–1–12		△3 TA AIR OPERATED 150 TON								
	TOTAL CLEARANCE "B"		0.045		HINGE PIN PART NO. 36310, 36310–06, 36310–12								
	LATCH PIN DIA. NEW MIN.		1.245		FOR SIZES SEE								
	BORE DIA. NEW MAX.		1.252		TA 150 MANUAL ELEVATORS								
	BORE DIA. WORN MAX.		1.270										
EARS	DIMENSION "D" MIN.	3.25	4.00	4.25	4.25	3.50	3.50	2.32	2.32	2.40	2.00	2.00	1.32
	RADIUS "R"	1.50	1.50	1.63	1.63	2.00	2.00	1.63	1.63	1.63	1.63	1.63	1.00
	DIMENSION "E"	3.94	4.50	5.19	5.88	7.19	9.00	4.25	5.13	7	4.25	5.00	3.25

* PLACE WHERE "D" IS TO E MEASURED (SEE WD 050 SH 2 OF 2).

ACAD FILE NO. WDB050A

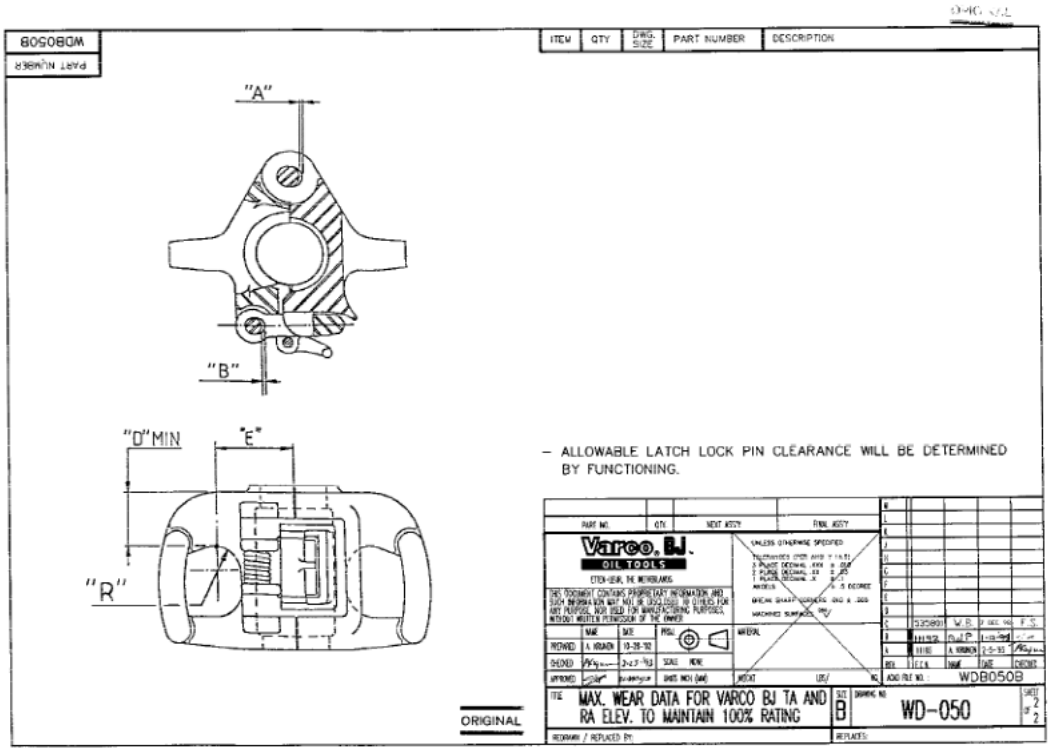

MAX. COLLAR WEAR DATA VARCO BJ A-TYPE ELEV. TO MAINTAIN 100% RATING

ELEVATOR TYPE	RA				TA		TA		TA		TA	
RATED CAPACITY	125 TONS	150 TONS	175 TONS	175 TONS	150 TONS	150 TONS	100 TONS	100 TONS	100 TONS	65 TONS	65 TONS	35 TONS
PART NO. ASS'Y	25462(–)	25459(–)	25456(–)	25453(–)	32754(–)	39342(–)	32383(–)	32384(–)	200000	32385(–)	32386(–)	32387(–)
SIZE	2-3/8 -- 3-1/2	4 -- 4-1/2	4-1/2 -- 5-1/2	6-5/8 -- 7	4-1/2 -- 8-5/8	8-1/2 -- 11-1/4	2-3/8 -- 2-7/8	3-1/2 -- 5	4-3/4 -- 8-5/8	1.660 -- 2-7/8	3-1/2 -- 4-1/2	1.050 -- 2-7/8
BORE SIZE	< 3-1/2	ALL	ALL	ALL	ALL	ALL	≤ 2-5/8	< 4	ALL	< 1-3/4	ALL	
H min. (Ref.)	1 5/8	FLAT(1-7/8)	FLAT(1-3/4)	FLAT(1-3/4)	FLAT	FLAT	1-3/8	1-5/16	FLAT	1-3/16	FLAT(1-1/4)	
BORE SIZE	≥ 3-1/2						> 2-5/8	≥ 4		≥ 1-3/4		
H min. (Ref.)	1 3/8						FLAT(1-1/4)	FLAT(1-1/4)		FLAT(1-1/4)		

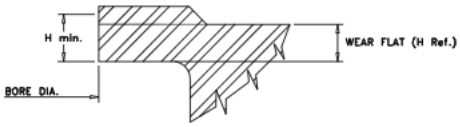

TA 35, 65, 100 TON ELEVATOR

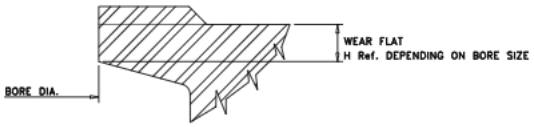

TA 150 TON ELEVATOR

B-WD-051

ACAD FILE NO. WDB051

MAX. WEAR DATA FOR SLIP ELEVATORS TO MAINTAIN 100% RATING

Varco B.J. — B-WD-060 — SHEET # 1 2

	ELEVATOR TYPE								
	RATED CAPACITY	LYT	MYT	YT	HYT	YC	MYC	HYC	HYC. AIR
	PART NO. ASS'Y	20 TONS	40 TONS	75 TONS	150 TONS	75 TONS	125 TONS	200 TONS	200 TONS
		28750	29328	55600	39284	24140	200360	55310	70160
STANDARD PINS	HINGE PIN SIDE								
	HINGE PIN PART. NO.	28753	29333	23116–1	39239	24181	200364	55311	70180
	TOTAL CLEARANCE "A"	0.025	0.025	0.030	0.035	0.035	0.040	0.045	0.045
	HINGE PIN MIN. DIA. NEW	0.996	1.245	1.620	1.994	1.745	2.369	2.869	2.869
	MAX. BORE DIA. NEW	1.002	1.252	1.627	2.002	1.752	2.377	2.878	2.878
	BORE DIA. WORN MAX.	1.015	1.265	1.645	2.020	1.770	2.400	2.900	2.900
	LATCH PIN SIDE								
	LATCH PIN PART. NO.	28757	29334	24182	39238	24182	200365	55312	55312
	TOTAL CLEARANCE "B"	0.025	0.025	0.030	0.035	0.035	0.035	0.045	0.045
	LATCH PIN MIN. DIA. NEW	0.622	0.933	1.370	1.745	1.370	1.620	1.745	1.745
	MAX. BORE DIA. NEW	0.627	0.940	1.377	1.752	1.377	1.627	1.752	1.752
	BORE DIA. WORN MAX.	0.640	0.953	1.395	1.770	1.395	1.645	1.775	1.775
1/16 OVERSIZED PINS	HINGE PIN SIDE								
	HINGE PIN PART. NO.	28753–06	29333–06		39239–06	24181–06	200364–06	55311–06	70180–06
	TOTAL CLEARANCE "A"	0.025	0.025		0.035	0.035	0.040	0.045	0.045
	HINGE PIN MIN. DIA. NEW	1.059	1.308		2.056	1.807	2.432	2.931	2.931
	MAX. BORE DIA. NEW	1.065	1.315		2.065	1.815	2.440	2.940	2.940
	BORE DIA. WORN MAX.	1.078	1.328		2.083	1.833	2.463	2.963	2.963
	LATCH PIN SIDE								
	LATCH PIN PART. NO.	28757–06		24182–06		24182–06	200365–06	55312–06	55312–06
	TOTAL CLEARANCE "B"	0.025		0.030		0.035	0.035	0.045	0.045
	LATCH PIN MIN. DIA. NEW	0.684		1.432		1.432	1.683	1.807	1.807
	MAX. BORE DIA. NEW	0.690		1.440		1.440	1.690	1.814	1.814
	BORE DIA. WORN MAX.	0.703		1.458		1.458	1.708	1.837	1.837
1/8 OVERSIZED PINS	HINGE PIN SIDE								
	HINGE PIN PART. NO.		29333–12		39239–12	24181–12	200364–12	55311–12	70180–12
	TOTAL CLEARANCE "A"		0.025		0.035	0.035	0.040	0.045	0.045
	HINGE PIN MIN. DIA. NEW		1.370		2.119	1.870	2.494	2.994	2.994
	MAX. BORE DIA. NEW		1.377		2.127	1.878	2.502	3.002	3.002
	BORE DIA. WORN MAX.		1.390		2.145	1.895	2.525	3.025	3.025
	LATCH PIN SIDE								
	LATCH PIN PART. NO.						200365–12	55312–12	55312–12
	TOTAL CLEARANCE "B"						0.035	0.045	0.045
	LATCH PIN MIN. DIA. NEW						1.745	1.870	1.870
	MAX. BORE DIA. NEW						1.752	1.877	1.877
	BORE DIA. WORN MAX.						1.770	1.900	1.900
EARS	DIMENSION "D" MIN.	1.438	2.188	3.31	3.625	3.25	3.80	3.625	3.625
	MEASURE POINT DIM "D" *	4.00	5.25	6.50	8.688	8.50	9.375	11.063	11.063
	"R" *	1.50	1.50	1.50	2.00	1.50	1.625	2.00	2.00

* PLACE WHERE "D" IS TO BE MEASURED (SEE WD 060 SH 2 OF 2).

ORIGINAL

WD 060

PART NUMBER

ITEM	QTY	DWG. SIZE	PART NUMBER	DESCRIPTION

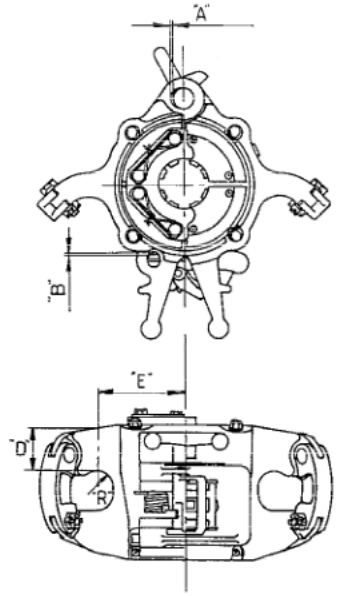

Varco B.J. OIL TOOLS

MAX. WEAR DATA FOR SLIP TYPE ELEVATOR TO MAINTAIN 100% RATING

B — WD-060 — SHEET 2 OF 2

WDB060B.DWG

ORIGINAL

MAX. WEAR DATA FOR VARCO SSD ELEV. TO MAINTAIN 100% RATING

B-WD-080 SHT 1 2

	ELEVATOR TYPE	SSD	SSD	SSD	SSD	SSD
	RATED CAPACITY	250 TON	250 TON	250 TON	200 TON	200 TON
	PART NO. ASS'Y	71273	71274	71275	71276	71277
	SIZE	6 5/8 – 7 5/8	8 5/8 – 10 3/4	11 3/4 – 14	14 1/8 – 16	18 5/8 – 20 1/2
STANDARD PINS	HINGE PIN SIDE					
	HINGE PIN PART. NO.	71521–1	71521–1	72038–1	72038–1	72038–2
	TOTAL CLEARANCE "A"	0.030	0.030	0.030	0.030	0.030
	HINGE PIN DIA. NEW MIN	1.245	1.245	1.745	1.745	1.745
	BORE DIA. NEW MAX	1.252	1.252	1.754	1.754	1.754
	BORE DIA. WORN MAX.	1.270	1.270	1.771	1.771	1.771
	LATCH PIN SIDE					
	LATCH PIN PART. NO.	71523	71523	71523	71523	71523
	TOTAL CLEARANCE "B"	0.030	0.030	0.030	0.030	0.030
	LATCH PIN DIA. NEW MIN	1.245	1.245	1.245	1.245	1.245
	BORE DIA. NEW MAX	1.252	1.252	1.252	1.252	1.252
	BORE DIA. WORN MAX.	1.270	1.270	1.270	1.270	1.270
1/16 OVERSIZE PINS	HINGE PIN SIDE					
	HINGE PIN PART. NO.	71521–106	71521–106	72038–106	72038–106	72038–206
	TOTAL CLEARANCE "A"	0.030	0.030	0.030	0.030	0.030
	HINGE PIN DIA. NEW MIN	1.308	1.308	1.808	1.808	1.808
	BORE DIA. NEW MAX	1.315	1.315	1.815	1.815	1.815
	BORE DIA. WORN MAX.	1.333	1.333	1.833	1.833	1.833
	LATCH PIN SIDE					
	LATCH PIN PART. NO.	71523–06	71523–06	71523–06	71523–06	71523–06
	TOTAL CLEARANCE "B"	0.030	0.030	0.030	0.030	0.030
	LATCH PIN DIA. NEW MIN	1.308	1.308	1.308	1.308	1.308
	BORE DIA. NEW MAX	1.315	1.315	1.315	1.315	1.315
	BORE DIA. WORN MAX.	1.333	1.333	1.333	1.333	1.333
1/8 OVERSIZE PINS	HINGE PIN SIDE					
	HINGE PIN PART. NO.	71521–112	71521–112			
	TOTAL CLEARANCE "A"	0.030	0.030			
	HINGE PIN DIA. NEW MIN	1.370	1.370			
	BORE DIA. NEW MAX	1.377	1.377			
	BORE DIA. WORN MAX.	1.395	1.395			
	LATCH PIN SIDE					
	LATCH PIN PART. NO.					
	TOTAL CLEARANCE "B"					
	LATCH PIN DIA. NEW MIN					
	BORE DIA. NEW MAX					
	BORE DIA. WORN MAX.					
EARS	DIMENSION "D" MIN.	4.00	4.00	4.00	4.00	4.00
	RADIUS "R"	2.25	2.25	2.25	2.25	2.25

MAX. WEAR DATA FOR VARCO SSD ELEV. TO MAINTAIN 100% RATING

B-WD-080 SHT 2 2

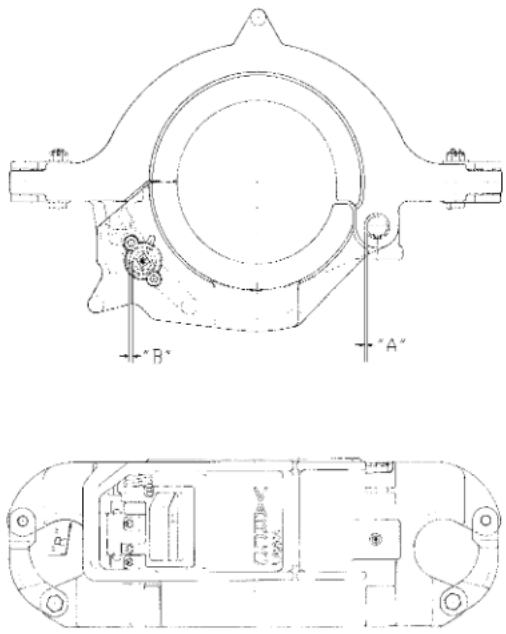

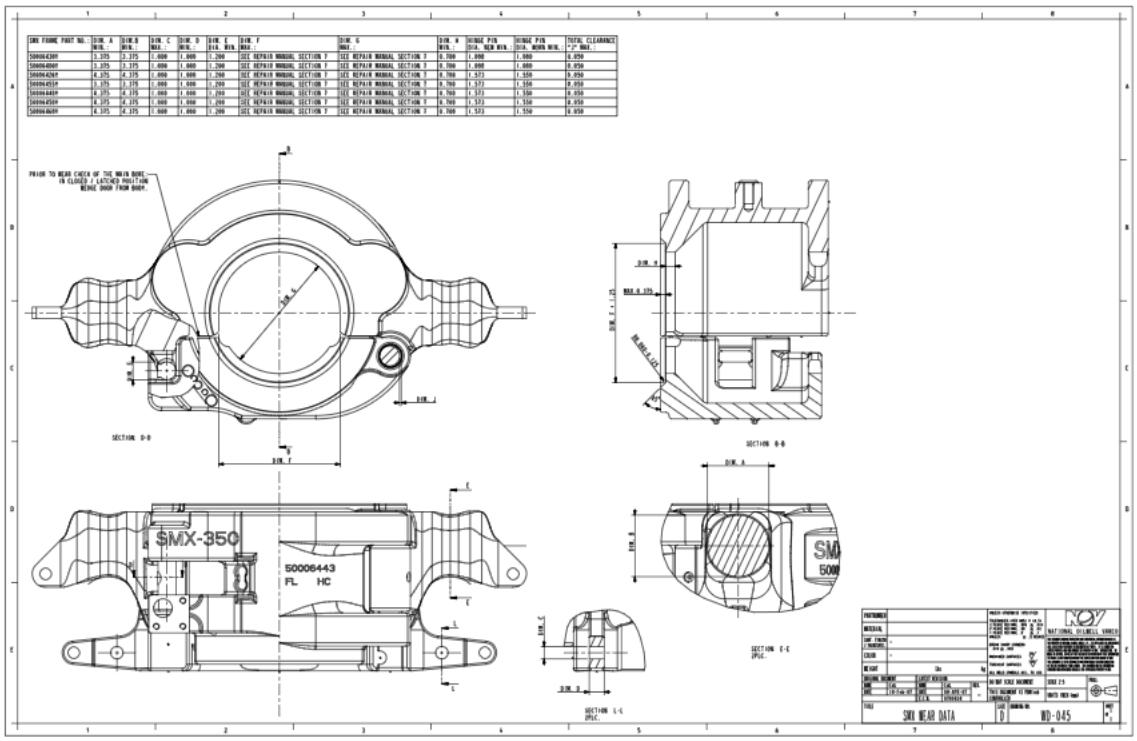
SMX-350
50006443
FL HC
SMX WEAR DATA
WD-045